Lippmann
Geophysikalische Messgeräte

4point light 10W

Earth resistivity meter

Operating instructions Software Version 4.87

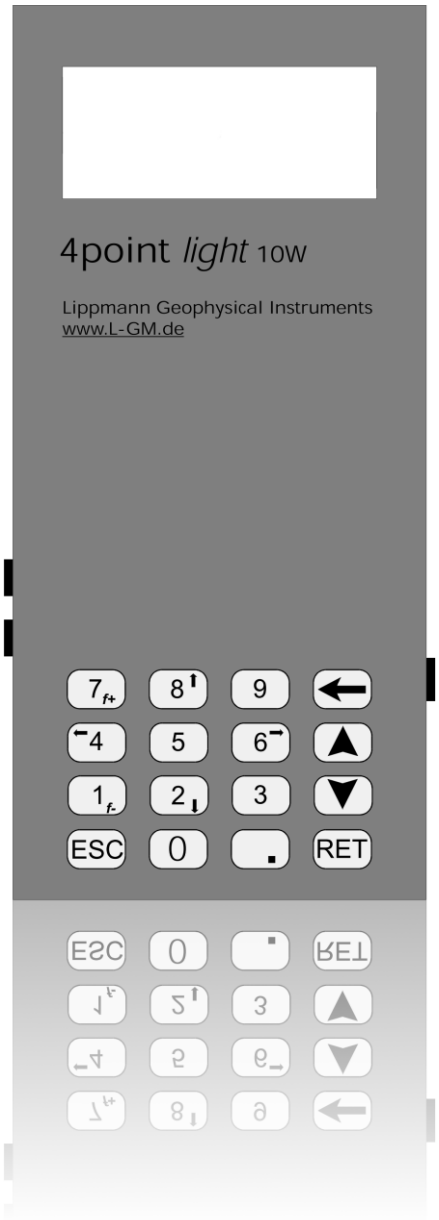

VES

Mapping

Remote

Tomography

Monitoring

Contact

Erich Lippmann - Geophysical Instruments

Kornacker 4 ▪ D-94571 Schaufling ▪ Germany

Phone +49 (0)9904 – 84 076 ▪ Skype erich.lippmann

www.l-gm.de ▪ lippmann@l-gm.de

Copyright

Content

1 Important information

1.1 Manufacturer

Erich Lippmann – Geophysical instruments

Kornacker 4

D-94571 Schaufling

Germany

Phone: +49 (0)9904 – 84 076

Skype: erich.lippmann

Mail: Lippmann@l-gm.de

1.2 Guarantee

Please contact the manufacturer for more information about general terms and conditions and the warranty period of the instrument.

1.3 Notes of presentation

1.3.1 Notation and Symbols

Notation/Symbol	Function
[xyz]	Keys of the instrument
„xyz“	Shown on the display
(Ω*m)	Physical units
▪	List
➔ xyz	Link
ⓘ	Useful hints, background information
☝	Warning of data loss

Tab. 1.1: Notations and symbols used

1.3.2 Guidance notes

The following guidance notes allow fast access to the requested information:

- Contents
- Register
- Index

The register directly leads from the front page to the individual measurement modes.

1.3.3 Instructions

Instructions which have to be done in a particular order are numbered. For example:

1. Select „Run“ in the main menu using [↑] and [↓]
2. Confirm input with [RET]

Instructions which have not to be done in a particular order are tagged with →.

1.3.4 Warnings

Warnings which refer to risks of personal injury or material damage looks like this:

⚠ WARNING

Warning which refer to risks of personal injury that may lead to severe injury or death

⚠ CAUTION

Warning which refer to risks of personal injury that may lead to minor or moderate injury

! NOTICE

Warning of potential material damage

Warning of data loss

2 Safety

The earth resistivity meter *4point light 10W* is allowed to be put into operation only if the following operating instructions are read carefully and if the safety instructions are observed.

→ This instrument may be operated by suitably qualified personnel only.
→ Read this instructions carefully before putting the earth resistivity meter *4point light 10W* into operation.
→ Familiarize with the operation and the handling of the instrument before using it.
→ Make sure to keep this manual well in reach.

2.1 Safety and warning instructions

To ensure safe instrument operation, it is essential to observe the following safety instructions.

⚠ WARNING

Voltage at the electrodes

Electrodes are under power during the measurement. Touching the electrodes during the measurement can cause electrical shock.

→ Before starting the measurement, make sure that no person is close to the electrodes anymore.
→ Do not touch the electrodes while the instrument is working.
→ Make sure that the instrument is not working before touching or relocating the electrodes.

⚠ WARNING

Live parts

After opening the instrument live parts may be exposed. Even terminals may conduct voltages. Touching may result in an electric shock.

→ Disconnect the instrument from the power supply before opening the housing.
→ Only a qualified electrical skilled person is allowed to open the housing of the instrument under voltage.

⚠ WARNING

Risk of fire

Charging voltages >15 volts may destroy the instrument and in the worst case can cause fire.

→ Always use charging voltages below 15 volts

⚠ CAUTION

Extreme working environment

At temperatures below 0 °C (32 °F) or above 50 °C (122 °F) as well as at humidity levels above 85 % function and operational safety of the instrument may be impaired.

→ In case of operating the instrument under extreme climatic conditions, please contact the manufacturer

⚠ CAUTION

Damage to the instrument

In case of visible damages to the instrument, e. g. after long storage or after storage under difficult climatic conditions, safe operation is no longer ensured.

→ Set the instrument out of operation
→ Mark the instrument as defective
→ Send the instrument back to the manufacturer for maintenance and repair

! NOTICE

Reverse polarity at the battery terminals

If batteries are inserted with wrong polarity, the instrument may be damaged. There is no protection against reverse polarity at the battery terminals.

→ Always insert the batteries with correct polarity

! NOTICE

Overheating of alkaline cells

Trying to reload alkaline cells may lead to overheating and to the destruction of the instrument. Alkaline cells may explode.

→ When alkaline cells are inserted, never connect an external power supply to the instrument
→ Switch off automatic charging

! NOTICE

Condensation

Condensation due to fog or a change of the environment from warm to cold can significantly disturb the function of the instrument.

→ Before starting the measurement wait several minutes until the instrument reached the ambient temperature
→ Do not perform measurements under condensing conditions (fog)

! NOTICE

Noise signals

Any type of noise at the measurement frequency will interfere with the measurement. Acquired data may not be evaluable.

→ Exclude mains interferences
→ Avoid magnetic interferences
→ Avoid measurements in case of wind or rain
→ Ensure mechanical stability of the electrodes

! NOTICE

Noise signals at 10 Hz measurement frequency

In Europe or other countries with 50 Hz mains frequency measurements at 10 Hz result in strong mains interferences. Mains interferences disturb the measurement

→ Never use 10 Hz in Europe or in any other countries with 50 Hz mains frequency.

2.2 Intended use

The earth resistivity meter *4point light 10W* is a high precision instrument for determination of soil resistivity. The electrical resistivity allows determination of the water content in the soil and of the types of soils and rock.

Applications are:

- Groundwater prospecting
- Mining
- Environmental investigations
- Lab measurements
- Measurement of Induced Polarization (IP)
- Sounding and mapping of archaeological sites

The instrument may not be changed or modified. Please observe the safety instructions!

2.3 Unintended use

- The instrument *4point light 10W* is not provided for conductivity measurements on living organisms. In the worst case, this might lead to the death of the animal. .
- Conductivity measurements on electrochemical cells may destroy the instrument.
- The Instrument is not intended for measurements in potentially explosive environments, e. g. mines and near potentially explosive gas mixtures.

2.4 Disclaimer

The manufacturer will not be liable for any damages or costs arising out of malfunction, wrong measurements or data loss of the instrument *4point light 10W*.

The manufacturer assumes no responsibility for injury or electric shock deriving from improper handling of the instrument or improper handling of the connected electro

3 Maintenance and disposal

3.1 Maintain the instrument

! NOTICE

Leakage of batteries

Leaking batteries may damage the instrument irreversibly.

→ Remove batteries from the instrument, if it is not in use for longer than one month
→ Remove batteries from the instrument, if it is stored at temperatures above 70 °C (+158 °F) or below -20 °C (-4 °F)

→ Recharge internal rechargeable batteries periodically, at the latest when the voltage falls below 4.8 volts ➔ 7.1 Switch on the instrument, page 25
→ Calibrate the instrument every two years ➔ 16.4 Calibration, page 22
→ Contact the manufacturer for updates of the device software ➔ 1.1 Manufacturer, page 7

3.2 Dispose the instrument

The device must be disposed of separately from the normal domestic waste.

→ Return empty batteries to the designated collection points
→ For a proper and environmentally friendly disposal, send the instrument back to the manufacturer ➔ 1.1 Manufacturer, page 7

4 Measurement principle and features

The earth resistivity meter *4point light 10W* is a high precision instrument for determination of soil resistivity. The phase shift between output current and voltage provides information about the induced polarization (IP). The accuracy of the instrument is about 0.1 % with a resolution of max. 100 nV.

4.1 Possible measurement setups

The basic measuring system consists of four electrodes (A, B, M and N), a transmitter and a receiver. Using the electrodes A and B the transmitter applies alternating current (AC) to the ground. The receiver measures the voltage U between the electrodes M and N. The earth resistivity meter *4point light 10W* is transmitter and receiver at the same time. The electrodes are connected to the instrument by cables. During the measurements the position of the current electrodes A and B is changed, the position of the potential electrodes remains fixed.

From the current I, the voltage U and a geometric configuration factor the specific electrical resistivity rho (Ω*m) is calculated.

Electrode arrays

The following four-electrode arrays are possible:

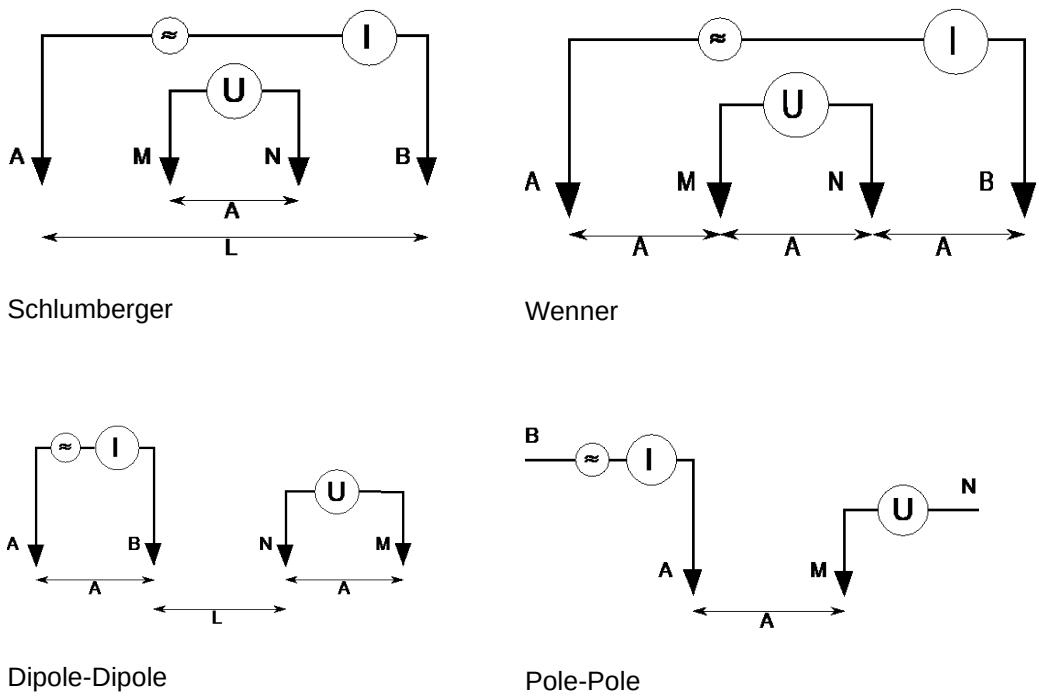

Fig. 4.1: Examples for four-electrode arrays

Geoelectrical Tomography

In geoelectrical tomography not only four but up to 100 electrodes are inserted into the ground along a given profile. The stainless steel electrodes are equidistantly connected to each other by a special cable. For each measurement four out of 100 electrodes are chosen in a previously defined order.

Further reading

Knödel K. et al., Geophysik. Handbuch zur Erkundung des Untergrundes von Deponien und Altlasten. Springer, 1997

Vogelsang D., Geophysik an Altlasten. Leitfaden für Ingenieure, Naturwissenschaftler und Juristen., Springer, 1993

http://www.geophysik.uni-kiel.de/~sabine/DieErde/Werkzeuge/Geophysik/M4-Elektrik/3Widerstand/Prinzip-Widerstand.htm, 11.7.2013

4.2 Constant output current

The instrument produces constant output currents, independent of the contact resistance of the electrodes. This is only possible within the limit of the maximum output voltage of the instrument which is about 380 V peak-to-peak. Thus an output current of 15 mA will only be possible if the resistance in the AB-circuit is below 190 V / 0.015 mA or 12 kΩ.

If the set current cannot be kept stable, no measurement is possible and the instrument will send a warning signal. A reason for this could be a loose connection, for example.

➔ 9 Troubleshooting, page 113

4.3 Variable transmitter frequencies

The *4point light 10W* is an AC instrument. The output current switches from positive to negative with selectable frequencies between 0.26 to 30 Hz. For applications which do not require the determination of the frequency effect the use of the following frequencies is recommended:

Country	Frequency
Europe	4.16 Hz
US	5 Hz
Japan	5 Hz

Tab. 4.1: Recommended measurement frequencies

The recommended frequencies result from the optimum suppression of the mains frequency and its harmonics. They will be a good compromise between fast data acquisition and low capacitive/inductive crosstalk between receiver and transmitter cables.

4.4 Specific noise suppression

! NOTICE

Noise signals

Any type of noise at the measurement frequency will interfere with the measurement. Acquired data may not be evaluable.

→ Exclude mains interferences
→ Avoid magnetic interferences
→ Avoid measurements in case of wind or rain
→ Ensure mechanical stability of the electrodes

! NOTICE

Noise signals at 10 Hz measurement frequency

In Europe or other countries with 50 Hz mains frequency measurements at 10 Hz result in strong mains interferences. Mains interferences disturb the measurement.

→ Never use 10 Hz in Europe or in any other countries with 50 Hz mains frequency. ⓘ

The receiver of the instrument is highly selective and only records voltages at the set frequency. However, noise at the measurement frequency will degrade the quality of the measurement and should be suppressed.

Reasons for noise are:

- Mains interferences
- Magnetic interferences
- Wind
- Rain
- Mechanical instability of the electrodes M and N

For better noise suppression, the *4point light 10W* records several samples and averages those values. By calculating the error on the basis of multiple measurements you get a good indication of the quality of the data.

➔ 10.1 Mathematics, page 114

ⓘ In Europe there is an additional interfering frequency of 16 2/3 Hz caused by the train system. It will be suppressed to a very high degree by using the measurement frequencies 0.26, 0.52, 1.04, 2.08, 4.16 or 8.33 Hz.

4.5 Induced polarization

The receiver not only records the potential difference but also the phase shift between the output current at AB and the voltage at the MN terminals. This phase shift is displayed as voltage (U90). It is called the "out-of phase"-voltage and usually is about 2-3 orders of magnitude below U0 or the "in-phase" voltage. .

The ratio U90/U0 multiplied by 1000 (mrad = 0.0572 degrees) is a direct measure for the phase shift and thus for the induced polarization (IP) of the soil.

➔ 10.1 Mathematics, page 114

5 Description of the instrument

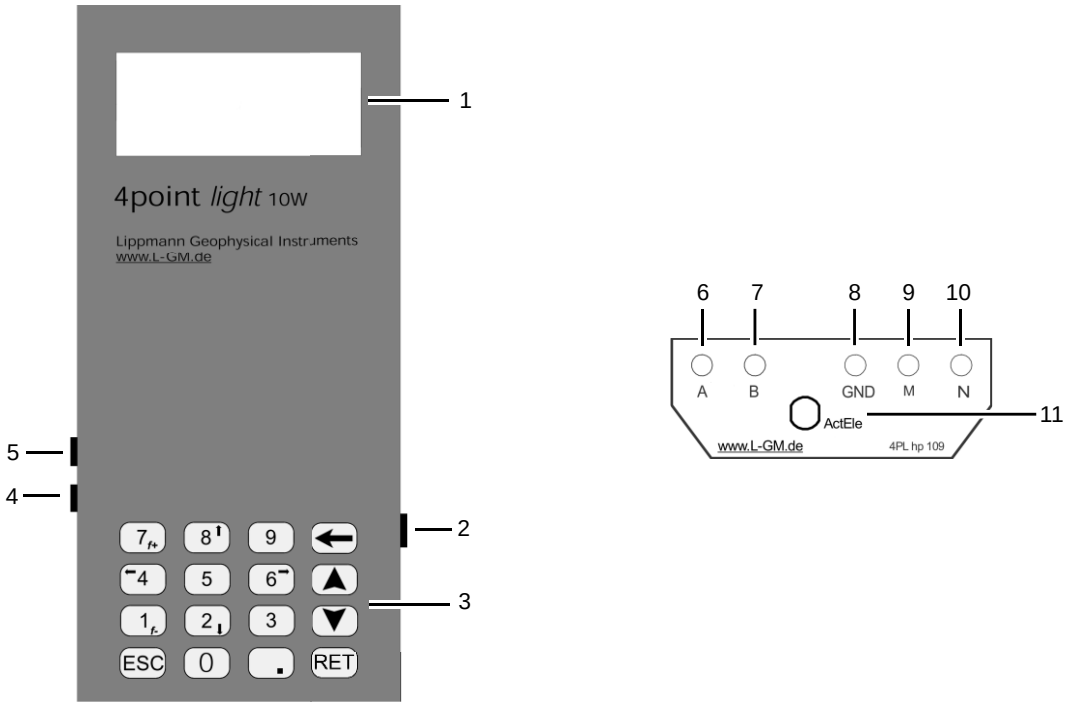

Fig. 5.1: Earth resistivity meter *4point light 10W*: Top view (left) and side view (right)

Number	Function
1	Display
2	Serial interface RS232
3	Keypad
4	0 V-connector
5	+12 V-connector
6	A, Connector for electrode A ⓘ
7	B, Connector for electrode B ⓘ
8	GND, Connector for GND/ground
9	M, Connector for electrode M ⓘ
10	N, Connector for electrode N ⓘ
11	ActEle, Connector for ActEle

ⓘ **Electrode designation**: A and B denote the electrode outputs as well as the current electrodes. M and N denote the electrode inputs as well as the potential electrodes.

6 Commissioning

6.1 Power supply

! NOTICE

Reverse polarity at the battery terminals

If batteries are inserted with wrong polarity, the instrument may be damaged. There is no protection against reverse polarity at the battery terminals.

→ Always insert the batteries with correct polarity!

! NOTICE

Overheating of alkaline cells

An accidental attempt of reloading alkaline cells may lead to overheating and to the destruction of the instrument. Alkaline cells may explode.

→ If alkaline cells are used, switch off automatic charging
→ Before connecting the instrument to an external power supply, remove all alkaline cells

---

The instrument is powered in two different ways:

- by internal rechargeable NiMh-batteries or alkaline cells
- by external power supply.

By default the instrument is equipped with rechargeable NiMh batteries (4 x 2.8 Ah / 1.2 V). The internal batteries can be exchanged with standard high capacity (>2.500 mAh) NiMh rechargeable batteries, or in emergency cases when no other power supply is available with AA-alkaline cells.

The external supply should be a voltage source of 10 to 15 V and 1.2 A. As soon as the instrument is connected to an external power supply, it automatically switches on. The supply input is proof against wrong polarity.

An automatic charging device is integrated in the instrument. This device allows recharging the internal batteries by using an external voltage source. For automatic charging "Quick charge" must be activated in the device settings.
➔ 8.10 Settings, page 92

Important data	
Charging	Via external voltage input (10 - 15 V / max. 1.5 A), reverse polarity proof
Charging time	About 4 h
Operating time	Minimum 1.5 h at maximum output power, under normal use about 20 - 30 h, in standby mode approximately 50 h
Terminals	12 V, 0 V, 2 x 4 mm ⓘ

ⓘ If left unpowered for a long period, it may be necessary to start the instrument by applying an external voltage source. In this case it may take several minutes until the internal buffer capacitor is sufficiently charged to resume normal operation.

The external voltage input is also used as trigger input in mapping mode.

6.2 Automatic charging

An automatic charging device is integrated in the instrument.

If “**Quick charge**” was **enabled** under "Settings" "Device", the internal batteries can be recharged as follows:

1. Connect the instrument via the 0 V/+12 V terminals to an external 12 V voltage source

   The instrument automatically switches on. The internal batteries are loaded and the battery voltage is displayed. When charging has finished the instrument automatically switches off.

2. Press [7] to change to the measurement mode while charging is going on.

   The instrument changes to the main menu and is ready for operation. Charging goes on. When charging has finished, the instrument remains switched on.

Quick charge terminates as soon as the battery voltage has peaked and decreased again by 5 - 50 mV (preset DeltaU value). DeltaU is set under: ➔ 8.10 Settings, page 92

If “**Quick charge**” was **disabled** under "Settings" "Device", the internal charging circuitry will buffer the batteries with a constant voltage of about 5.5 V.

6.3 Operating modes

The instrument will acquire **resistivity data** in **five different modes**:

- **V**ertical**E**lectrical**S**ounding (**VES**)

The VES-mode comprises the classical 4-electrode resistivity soundings like Schlumberger, Wenner, Dipole-Dipole and Pole-Pole

- **MAP**ping (**MAP**)

The mapping mode is mainly developed for archaeological work and will enable the user to perform high speed measurements in a two-dimensional grid.

- **R**e**M**o**T**e (**RMT**)

In Remote mode (RMT) an external computer will control the instrument. This mode will mainly be useful with active external electrodes.

- **TOM**ography (**TOM**)

In tomography mode tomography data will be acquired with external active electrodes.

- **MON**itoring (**MON**)

In monitoring mode time lapse data with either active electrode systems or a single 4-electrode combination can be acquired.

Two other measuring modes in the main menu are**:**

- **CONTACT**

Under the menu item CONTACT the output voltage is estimated, which is necessary to establish the preset constant output current at the AB electrodes. This voltage indicates the quality of the coupling of the current electrodes.

- **S**elf**P**otential (**SP**)

SP is used for the determination of the spontaneous potential at M and N (useful in case of unpolarizable electrodes at M and N).

6.4 Calibration

There are **two possibilities** to calibrate the instrument:

- **Offset calibration**
- **Full calibration**, this means calibrating the complete receiver transfer function

The instrument is delivered fully calibrated!

New **calibrations are recommended only**:

- in intervals of several months
- in case of operating the instrument under extreme temperature conditions
- in case of trying to determine very small voltages (of the order of < 5 microvolts) at MN with high accuracy.

Repeatedly performing a **full calibration** is recommended **for high resolution IP measurements.**

For calibration instructions refer to ➔16.4 Calibration, page 22

6.5 Connection to the PC

Data can be exchanged with a PC by using the serial interface of the instrument (RS232). This concerns the transmission of measurement data to the PC as well as the transfer of parameter sets to the instrument.

6.5.1 Data transfer to the PC

1. Start a terminal program on the PC (e.g. Windows HyperTerminal or HTerm)
2. Set the required interface parameters, e. g. baud rate and separators under "Settings" ⓘ ➔ 8.10.2 Communication, page 96
3. Start data transfer under the menu item "Output" in the corresponding measurement mode (e. g. VES, Monitoring…)

6.5.2 Data transfer to the instrument

1. Start a terminal program on the PC (e.g. Windows HyperTerminal or HTerm)
2. Set the required interface parameters, e. g. baud rate and separators under "Settings" ⓘ ➔ 8.10.2 Communication, page 96
3. Select "Load" in the tomography or monitoring menu
   ➔ 8.5.1 Load, page 67 or 8.6.1 Load, page 75
4. Start data transfer (normally parameter sets) in the terminal program

ⓘ If using a terminal program you have to select the ASCII format for transmission. If using *Com4point* selection of ASCII or binary format is possible. For large mapping arrays binary format should be chosen, because the rate of transmission in binary format is much higher than in ASCII format.

6.6 Connection to the FTP server

Data can be transferred to a FTP server using a GPRS modem and the mobile phone network.

To connect the instrument to the server, proceed as follows:

1. Connect the modem to the instrument via the serial interface (RS232)
2. Switch on both devices
3. Select the menu item "GPRS" from the "Settings" "Communication"! menu
4. Enter the PIN of the Simcard and the "Context"
   ➔ 8.10.2 Communication, page 96
5. Select the menu item "Test FTP" from the "Misc" menu

   The strength of the mobile telephone network is checked. It should be about 15 - 20.

6. Select "Test GPRS" from the "MISC" menu

   The instrument checks if GPRS works. If the test fails, please repeat it once or twice. If the test fails more than three times, GPRS does not work.

7. Select the menu item "FTP" from the "Settings" "Communication" menu

   Enter the parameters TCP address (format: www.xxx.yyy.zzz), data storage folder on FTP server (the folder must already exist), login name and password

8. Select the menu item "Test FTP" from the "MISC" menu

   Connection to the FTP server is checked. If the data transfer was successful, a small text file appears on the server.

6.7 Avoiding mistakes

Error	Avoiding
Inductive effects	Keep live cable reels away from the voltage electrodes M and N Use well-insulated cables, e.g. silicon rubber or PTFE. Hard PVC is acceptable (best price / performance ratio), soft and flexible PVC ranks as bad insulation
Capacitive coupling	Try to separate the cables leading to A and B from the cables leading to M and N as much as possible to avoid capacitive coupling
Poor signal-to-noise ratio	Connect a fifth electrode to the GND terminal and use it close to the instrument ⓘ

ⓘ Always use the GND electrode when operating the instrument with active external electrodes

7 Operation

7.1 Switch on the instrument

! NOTICE

Overheating of alkaline cells

Trying to reload alkaline cells may lead to overheating and to the destruction of the instrument. Alkaline cells may explode.

→ When alkaline cells are inserted, never connect an external power supply to the instrument.
→ Disable “Chick charge” ➔ 8.10 Settings, page 92

To switch on the device, proceed as follows:

1. Press [RET]

   The display shows the boot sequence and the command "Please press key [7]".

2. Press [7]

   The display shows the main menu. The battery voltage is 5.52 V. The instrument is ready for operation. ⓘ

```
VES MAP RMT TOM MON
CONTACT SP DELETE
SETTINGS MISC INFO
Battery:   5.52V
```

Fig. 7.1: Main menu

If [7] is not pressed, the device switches off automatically within a few seconds.

ⓘ **Battery:** The voltage of the internal rechargeable batteries is shown. If the voltage falls below 4.8 V, the rechargeable batteries must be reloaded before operating the instrument. For this purpose the instrument has to be connected to an external voltage source (10 - 15 V).

➔ 6.1 Power supply, page 20

➔ 8.10 Settings, page 92

7.2 Switch off the instrument

→ Press [ESC] until the instrument is switching off

7.3 Use of keypad

The instrument is controlled via the keypad. The key assignment is shown in the table. Some keys serve multiple functions.

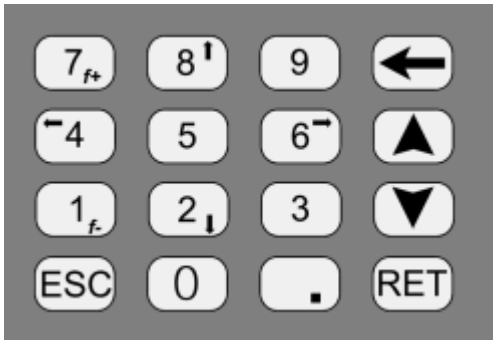

Fig. 7.2: Keypad

Key assignment	Reaction	Multiple function
[←]	back	
[▲] / [▼]	up/down	yes
[RET]	Confirm selection	
[ESC]	Cancel	
[▪]	Point	
[0] … [9]	Numerical Keys	yes

Tab. 7.1: Key assignment

Key assignment	Multiple function
[▲] / [▼]	Select output current
[7], [1]	Select measurement frequency with f+, f-
[3], [9]	Select L/2 in VES mode
[4], [6] and [2], [8]	Navigation In X- and Y-direction in Mapping mode

Tab. 7.2: Multiple functions of several keys ⓘ

Multiple functions: Depending on the program mode, several keys serve multiple functions.

➔ 8.2 VES mode, page 30

➔ 8.3 Mapping mode, page 40

Shorcuts

If the [.] key is pressed at the same time as the device is started, the main menu is accessed directly, regardless of the settings made under **Settings | Device | Startup**.

The menu items on the display of the device are numbered consecutively, starting at 0. By pressing the corresponding number on the number pad of the device, the desired menu item is reached directly.

Example: If you are in main menu and you press [8], you will directly access the **Settings** menu.

Alphanumeric character strings for GPRS

From version V 4.40 onwards it is possible to enter alphanumeric strings for certain parameters in the “Settings” menu. This mainly concerns the GPRS and FTP settings for the monitoring GPRS mode. The characters are selected by repeatedly pressing the corresponding key on the key pad (like writing a text message on a mobile phone). Key assignment is as follows:

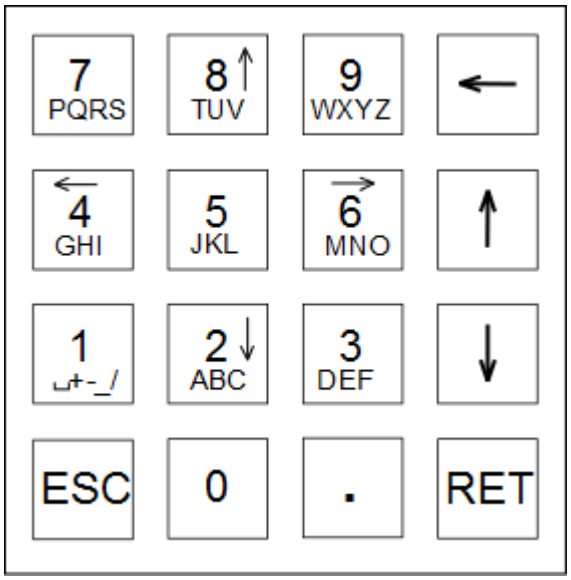

More than 20 characters are possible.

➔ 8.10.2 Communication; page 96

Example

You intend to write an "A":

Key [2] is assigned to the following characters: [a] [b] [c] [A] [B] [C] [2]

→ Press key [2] four times in short intervals.

You will get an “A“ on the display. After about one second the cursor automatically moves to the next position and you can enter the next character. Letters and numbers always will be inserted, never overwritten.

→ Delete character with [🡐].
→ Move cursor within a string with [🡅] / [🡇]

Special characters

Key [1] is assigned to [blank] and the special characters + - _ / @ § $ %
Key [1] is assigned to the special characters ! ( ) # + * =

8 Menu navigation

8.1 Main menu

Select the operating mode ("VES" ... "SP") from the main menu. You also can delete the instruments memory (“Delete”) and edit the settings of the instrument (“Settings”). Under “Misc” you will find the calibration and the testing of GPRS / FTP connections. The display always shows the current battery voltage.

```
VES MAP RMT TOM MON
CONTACT SP DELETE
SETTINGS MISC INFO
Battery:   5.52V
```

Fig. 8.1: Main menu

Menu item	Function
VES	Vertical Electrical Sounding mode
MAP	Mapping mode
RMT	Remote mode
TOM	Tomography mode
MON	Monitoring mode
CONTACT	Continuous display of transmitter voltage
SelfPotential	Continuous display of self-potential
DELETE	Delete data
SETTINGS	Settings of the instrument
MISC	miscellaneous (calibration, test GPRS, FTP, GSM)
INFO	Information
Battery	Display of battery voltage, recharge battery when < 4.8 V!

Tab. 8.1: Main menu – menu items

8.2 VES mode

The mode “Vertical Electrical Sounding“ (VES) comprises the classical 4-electrode resistivity soundings like Schlumberger, Wenner, Dipole-Dipole…

The output current for the VES measurements can be set only during the measurement (➔ Fig. 8.7).

➔ 8.2.1 Measurement – Schlumberger mode, page 31

```
VES MAP RMT TOM MON
CONTACT SP DELETE
SETTINGS MISC INFO
Battery:   5.52V
```

Fig. 8.2: Main menu

1. Select „VES“ from the main menu with [⮝] and [⮟]
2. Confirm selection with [RET]

```
  VES MEASUREMENT
SCHLUMB HALF-SCHLUMB
WENNER DIPOL-DIPOL
POLE-POLE Output
```

Fig. 8.3: VES menu (Vertical Electrical Sounding)

3. Select the geometry from the VES menu with [⮝] and [⮟]
4. Confirm selection with [RET]

The following instructions apply both to Schlumberger and Half-Schlumberger measurements. They also can be applied to all selectable geometries. Differences of parameter settings in Wenner mode, Dipole- Dipole mode and Pole-Pole mode are pointed out in a separate chapter.

➔ 8.2.2 Measurement parameters for additional geometries, page 35

Regardless of the chosen geometry, **data acquisition** in all VES modes **is structured in files** and **records**. A record is an individual data point and it contains output current, input voltage and geometry parameters. A file contains several records measured at one location.

In VES mode the instrument will turn on the transmitter only for the current measurement. After turning the transmitter on **it takes about 0.4 seconds for the receiver to settle**. To take care of this and for best **performance the delay time can be changed in the menu. “Settings“ “Acquisition“**. But unless you are not very familiar with the instrument, leave this parameter at **the value the instrument was delivered (0.5 sec).**

➔ 8.10.4 Acquisition, page 99

8.2.1 Measurement – Schlumberger mode

Select e. g. "Schlumb" from the VES menu and you will see the following mask for selecting the file:

```
Schlumberger
File No: 0     (0..99)
Rec: 1    Auto OFF/ON
20.12.2021 14:35:05
```

Fig. 8.4: Schlumberger mode

Menu item	Function
File No:	File number from 0 to 99
Rec:	Number of records
Auto	Automatic mode OFF / ON for setting the current
20.12.2021	Date of file creation
14:35	Time of file creation

Tab. 8.2: Schlumberger mode – menu items

3. Select file number with [▲] and [▼]
4. Switch automatic mode on or off with [🡐]
5. Confirm selection with [RET]

Data browser

If "Auto ON" was selected, you will first enter the "Auto settings" menu and then skip to the **data browser**.

➔8.2.3 Automatic mode, page 36

If "Auto OFF" was selected, you immediately skip to the **data browser**. The instrument displays the saved Schlumberger measurements. Navigation through the records now is possible.

```
SCHLUMB REC5   4.16Hz
1mA    0.1m   0.01m
0.00323   Ohm*m    12%
-12.3mrad       4mrad
```

Fig. 8.5: Data browser for Schlumberger measurement results

Menu item	Function
Schlumb	Geometry
Rec 5	Number of record
4.16 Hz	Frequency
1 mA	Current
0.1 m	L/2 (Schlumberger), otherwise L/2 or L (depending on the measurement mode)
0.01 m	A/2 (Schlumberger), otherwise A/2 or A (depending on the measurement mode)
0.00323 Ohm m	Rho
12 %	typical error in %
-12,3 mrad	Phase
4 mrad	Typical error in mrad

Tab. 8.3: Schlumberger measurement results

Key assignment	Reaction
[▲]/[▼]	Previous or next record is shown
[🡐]	Current record is deleted and overwritten with next measurement
[RET]	Create new record
[ESC]	Cancel

Tab. 8.4: Navigation through Schlumberger measurement results

Schlumberger measurement parameters

How to proceed:

6. Click [🡐] to overwrite current record with next measurement or
7. Click [RET] to create a new record

The display shows the **editable parameters**:

```
SCHLUMB REC5  4.16Hz
L/2 [m]: 0.1
A/2 [m]: 0.01
AutoF:Off  AutoL:Off
```

Fig. 8.6: Schlumberger and Half-Schlumberger mode – measurement parameters

Menu item	Function
Schlumb	Geometry
Rec 5	Number of record
4.16 Hz	Frequency (for differing key assignment please refer to Tab. 8.6 or Tab.. 8.7)
L/2 (m)	Set L/2, range: 1 mm – 10 000 m (for differing key assignment please refer to Tab. 8.6 und Tab.. 8.7)
A/2 (m)	Set A/2, range: 1 mm – 10 000 m
AutoF:off	Set AutoF (for differing key assignment please refer to Tab. 8.6 and Tab.. 8.7) ⓘ
AutoL:off	Set AutoL (for differing key assignment please refer to Tab. 8.6 und Tab.. 8.7) ⓘ

Tab. 8.5: Editable measurement parameters for Schlumberger and Half-Schlumberger mode

Key assignment	Reaction
[▲]/[▼]	Navigation UP / DOWN
[🡐]	Delete character
[RET]	Continue
[ESC]	Cancel
[0]... [9], [.]	Input of numerical values (not activated if cursor is on AutoL, AutoF or 4,16 Hz)

Tab. 8.6: Navigation through Schlumberger and Half-Schlumberger measurement parameters

If the cursor is on AutoL, AutoF or the frequency, the key assignment is as follows:

Cursor position	Key assignment	Reaction
AutoL	[🡐]	Set AutoL On/Off
AutoF	[🡐]	Set AutoF On/Off
L/2 (m)	[3] / [9]	L/2 decrement / increment (only activated **if AutoL On**) ⓘ
4,16 Hz	[1] / [7]	Frequency decrement / increment (only activated, **if AutoF Off**) ⓘ

Tab.. 8.7: Differing key assignments

8. Edit measurement parameters

Start measurement

9. Start measurement with [RET]

In AutoL-mode ON the instrument proposes a number of values for L/2 according to an internal table (6, 10 or 12 points per decade). The meter will use these values during data acquisition. Manual corrections are possible according to the setting of AutoL. A/2 always has to be set manually!

In AutoF-mode, the instrument will perform **subsequent measurements at different frequencies**.

The proposed number of **points per decade** (P/DEK) and the **frequencies** are selected under “Settings“ “Acquisition“

➔ 8.10.4 Acquisition, page 99

Running measurement in Schlumberger mode

```
Schlumb          REC 5
I: 1 mA       Avg 51 A
U0 :123.10mV   15.60%
U90:-999.23uV 47.11%
```

Fig. 8.7: Measurement in Schlumberger mode

Menu item	Function
Schlumb	Measurement mode
Rec 5	Number of record
I: 1 mA	Output current (mA)
Avg: 51	Number of averages
A/M	A = Automatic M = Manual
U0: 123.10 mV	Averaged in-phase-input voltage (mV)
15.60 %	Error (%)
U90: -999.23 µV	Averaged out-of-phase-input voltage (µV)
47.11 %	Error (%)

Tab. 8.8: Displayed parameters during measurement in Schlumberger mode

Key assignment	Reaction
[▲] / [▼]	Set current (this terminates automode for this measurement)
[RET]	Stop measurement, save data, program returns to the edit mode of measurement parameters
[ESC]	Cancel measurement, data are not saved, program returns to the edit mode of measurement parameters

Tab. 8.9: Navigation through Schlumberger measurement results

In AUTO mode the measurement ends as soon as the error of U0 and U90 falls below the preset value.

➔8.2.3 Automatic mode, page 36

8.2.2 Measurement parameters for additional geometries

Select the desired geometry and repeatedly click [RET] to enter the menu measurement parameters.

Wenner and Pole-Pole

```
WENNER   REC5   4.16Hz

A [m]: 0.01
AutoF:Off   AutoA:Off
```

Fig. 8.8: Measurement parameters for Wenner and Pole-Pole mode

Menu item	Function
Wenner	Geometry
Rec 5	Number of record
4.16 Hz	Frequency
A (m)	Set A/2, range: 1 mm – 10 000 m
AutoF:Off	Set AutoF (for differing key assignment please refer to Tab. 8.7 and Tab. 8.8) ⓘ
AutoA:Off	Set AutoA (for differing key assignment please refer to Tab. 8.7 and Tab. 8.8) ⓘ

Tab. 8.10: Editable measurement parameters for Wenner and Pole-Pole mode

Dipole-Dipole

```
DIPOL    REC5   4.16Hz
L [m]: 0.1
A [m]: 0.01
AutoF:Off
```

Fig. 8.9: Measurement parameters for Dipole-Dipole mode

Menu item	Function
Dipole	Geometry
Rec 5:	Number of record
4.16 Hz	Frequency
L (m)	Set L, range 1 mm – 10 000 m (dipole separation)

A (m)	Set A, range 1 mm – 10 000 m (dipole length)
AutoF: Off	Set AutoF (for differing key assignment please refer to Tab. 8.7 and Tab. 8.8) ⓘ

Tab. 8.11: Editable measurement parameters for Dipole-Dipole mode

Key assignment	Reaction
[▲] /[▼]	Navigation up / down
[🡐]	Delete character
[0]... [9], [.]	Input of numerical values (not activated if cursor is on AutoF or 4,16 Hz)
[RET]	Continue
[ESC]	Cancel

Tab. 8.12: Navigation through measurement parameters for Wenner, Pole-Pole and Dipole-Dipole

Cursor position	Key assignment	Reaction
L/2 or L, automode	[🡐]	End automode
L/2 or L, automode	[3] / [9]	Browse L/2 or L-values
L/2 or L, manumode	[🡐]	Delete character
L/2 or L, manumode	[0]... [9]	Enter numerical values

Tab. 8.13: Differing key assignments

ⓘ **In AutoA-mode ON** the instrument proposes a number of values for A according to an internal table (6, 10 or 12 points per decade). Manual corrections are possible according to the setting of AutoA.

In AutoF-mode, the instrument will perform **subsequent measurements at different frequencies**.

The proposed number of **points per decade** (P/DEK) and the **frequencies** are selected under “Settings“ “Acquisition“

➔ 8.10.4 Acquisition, page 99

8.2.3 Automatic mode

In automatic mode, the instrument will set the correct output current automatically: The current is increased until the minimum input voltage is reached. The instrument then repeats the measurement until the preset accuracy (max. error of U0 or U90 falls below the preset value) or the maximum number of averages (MaxAv) is reached.

The subsequent measurements will start with the settings of the last acquisition cycle. The instrument increases or reduces the output current, if necessary.

Auto Settings

If "Auto ON" was selected, the instrument will enter **the menu "Auto Settings".** At this point **you set the minimum input voltage and the termination criteria** for the measurement, e. g. the error of U0 / U90 and the maximum number of averages.

```
Auto Settings
Min.Voltage: 10.0 mV
Error U0: 10 %
MaxAv:  128
```

Fig. 8.10: Auto settings (Auto ON)

Menu item	Function
Min. Voltage:	minimum input voltage for U0 (mV)
Error U0 / U90:	Error of U0 **or** U90 ⓘ
MaxAv	Max. Number of averages (1..255)

Tab. 8.14: Auto settings – e.g. Schlumberger

1. Set minimum input voltage by using the numerical keys
2. Continue with [▲] or [▼]
3. Select error for U0 or U90 with [🡐].
4. Set error by using the numerical keys
5. Continue with [▲] or [▼]
6. Set max. number of averages by using the numerical keys
7. Continue with [▲] or [▼]
8. Confirm selection with [RET]

You now automatically skip to the data browser and from there to the editable measurement parameters

➔ 8.2.1 Measurement – Schlumberger mode, page 31

ⓘ Termination criterion can be the error of U0 or U90. Selecting U90 as termination error is useful for highly accurate automatic IP measurements. Switch from U0 to U90 and v. v. by clicking [🡐].

8.2.4 Output

After the measurement data are to be transferred to the PC via the serial interface. **Data transmission** is either in **ASCII or binary** format. For transmission in binary format the program *Com4Point* is necessary. ⓘ

```
     VES OUTPUT
Single File
All Files
```

Fig. 8.11: VES output

Menu item	Function
Single File	A single file is transmitted
All Files	All measurement files are transmitted

Tab. 8.15: VES output – menu items

If using the supplied program *Com4Point,* keep to this order:

- Start *Com4Point* on the PC, switch the program into receive mode
- Start data transfer from the instrument to the PC via "Output".

Single File

Select "Single File" and you will see:

```
     VES OUTPUT
SCHLUMB HALF-SCHLUMB
WENNER DIPOL-DIPOL
POLE-POLE
```

Fig. 8.12: Data transfer of a single file

1. Select data transfer mode with [⮝] and [⮟]
2. Confirm with [RET]

```
SCHLUMBERGER
File No: 0
(0..99)
Rec: 3
17.12.2019  09:26:26
```

Fig. 8.13: Transmission of a Schlumberger file

Menu item	Function
File No: 0	File number
Rec: 3	Number of measured records/datasets
17.12.2009	Date of file creation
09:26:26	Time of file creation

Tab. 8.16: Output single file – menu items

3. Select file number with [▲] and [▼]
4. Confirm with [RET]

Data transfer starts.

All Files After selection of “All Files“ **all measured files are immediately transferred** to the PC.

8.3 Mapping mode

In mapping mode near-surface conductivity anomalies can be located. This function is especially useful e. g. for archaeological objects.

⚠ WARNING

Voltage at the electrodes

Electrodes are under power during the measurement. Touching the electrodes during the measurement can cause electrical shock!ⓘ

→ Start measurement only if not a single person is close to the electrodes anymore.
→ Do not touch the electrodes while the instrument is working
→ Make sure that the instrument is not working before touching or relocating the electrodes.

In the field a grid has to be set up. Along the grid the operator acquires data in a zig-zag mode: He starts first along the X-coordinate with Y= 0, then increases Y by 1 and moves back to X =0, sets Y=2 and so on.

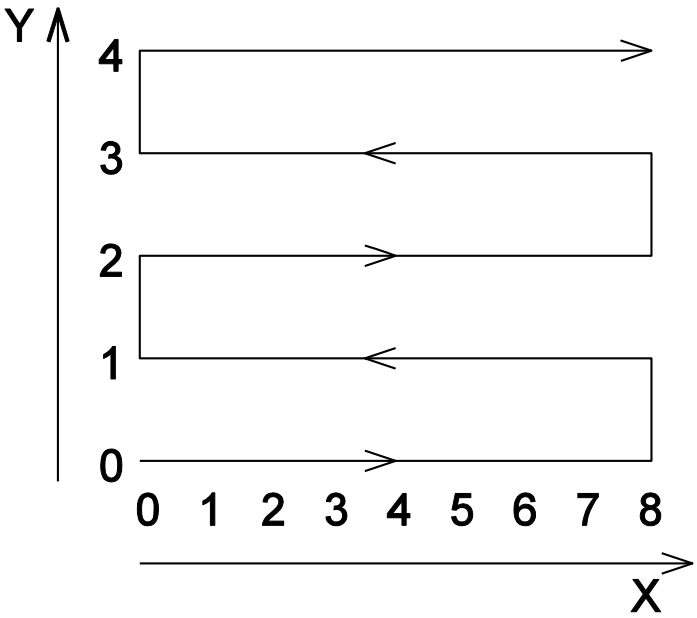

Fig. 8.14: Order of data acquisition in mapping mode

Standard mapping usually is performed using a pole-pole array with one stationary remote potential electrode, one current electrode and two mobile electrodes. Data are recorded as voltage and current only, no apparent resistivity is calculated.

➔ 8.3.1 Standard mapping, page 42

An **advanced mapping mode** is now available where **multiple mobile electrodes** can be addressed. Thus a depth resolution of resistivity is possible.

➔ 8.3.2 Multimapping, page 51

In mapping mode it is possible to use an external trigger switch connected to the terminals of the external voltage input. A short between these terminals has the same function as pressing [RET].

In mapping mode a closed AB circuit indicates, whether the electrodes are in place or not. The **transmitter of the instrument** therefore is **always ON** and the **AB electrodes are under power**.

8.3.1 Standard mapping

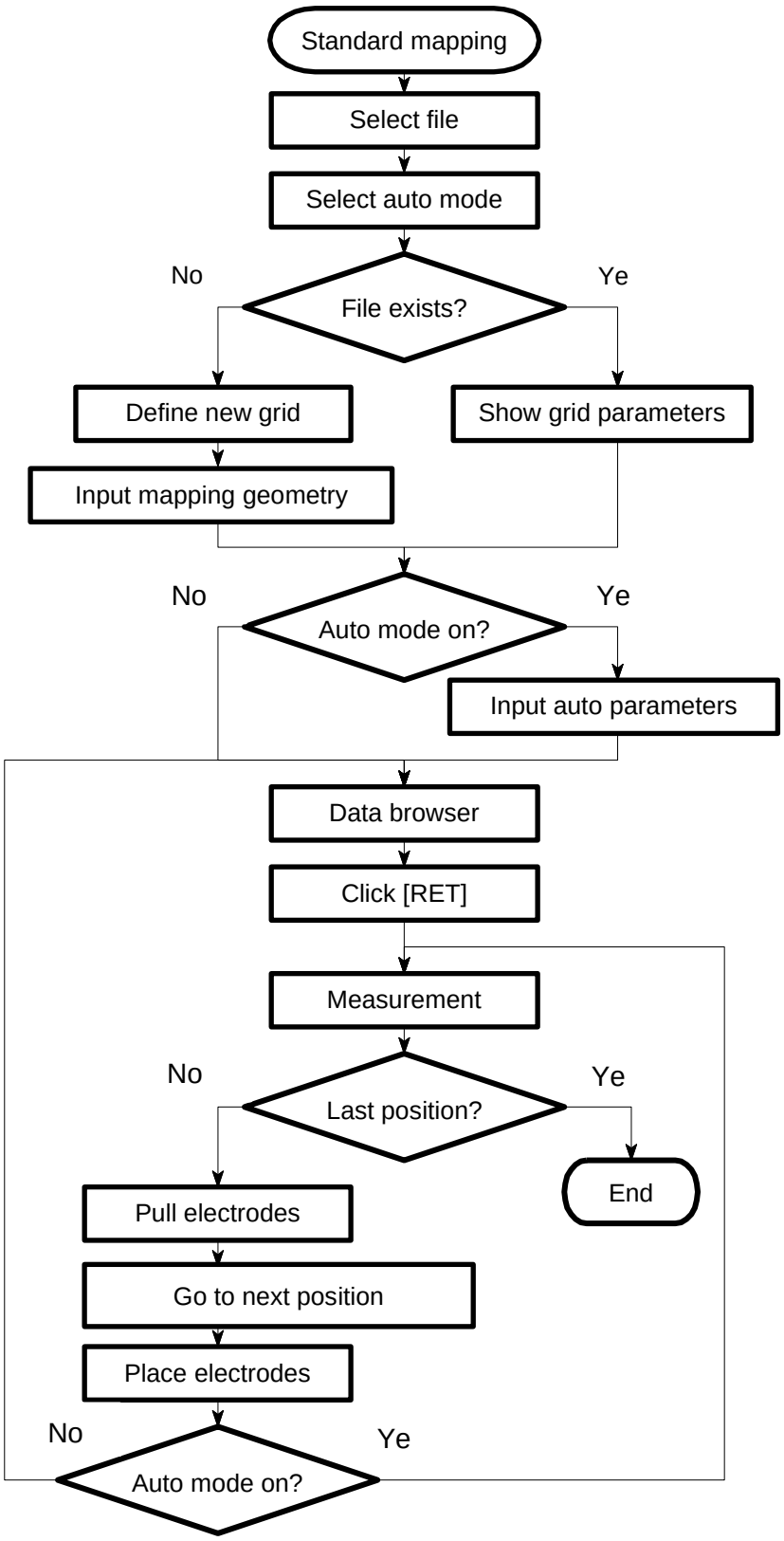

Fig. 9.19: Sequence of operation in standard mapping

```
VES MAP RMT TOM MON
CONTACT SP DELETE
SETTINGS MISC INFO
Battery:   5.52V
```

Fig. 8.15: Main menu

1. Select „MAP“ from the main menu with [⮝] and [⮟]
2. Confirm selection with [RET]

```
      MAPPING
Standard
Multimapping
```

Fig. 8.16: Mapping mode

3. Activate mapping mode with [RET]

```
  STANDARD-MAPPING
Run
Output
```

Fig. 8.17: Standard mapping

4. Select „Run“ with [⮝] and [⮟]
5. Confirm selection with [RET]

8.3.1.1 Run

```
  STANDARD-MAPPING
File No:0 (0..9)
Auto mode: ON
Empty
```

Fig. 8.18: Standard mapping “Run“

Menu item	Function
File No: 0	File number (0 … 1)
Auto mode: ON	Automatic mode ON/OFF
Empty	Status line: file is empty

Tab. 8.17: Standard mapping “Run” – menu items

Key assignment	Reaction
[▲] / [▼]	Select file number
[🡐]	Select automatic mode ON/OFF
[RET]	Continue
[ESC]	Cancel

Tab. 8.18: Navigation through the standard mapping menu

1. Select file number with [▲] and [▼]
2. Select automatic mode ON or OFF with [🡐]
3. Confirm selection with [RET]

File already exists

If the file of the selected file number already exists, grid parameters are shown:

```
Grid size, file 0
X:6.4m    (8*0.8)
Y:2.5m     (5*0.5)
```

Fig. 8.19: Display of grid parameters of an existing file

Key assignment	Reaction
[RET]	Use grid parameters / file shown
[ESC]	Cancel

Tab. 8.19: Navigation through grid parameters

1. Confirm parameters with [RET]

Status “Empty“

If the file of the selected file number is empty (status „Empty“), grid parameters have to be defined:

```
New Grid       4.16Hz
Xmax:  0      (1..255)
Ymax:  0      (1..255)
Free:  41345 Samples
```

Fig. 8.20: “New Grid” – Definition of a new grid

Menu item	Function
New Grid	New grid
4.16Hz	Measurement frequency
Xmax: 0	Number of grid points in X-direction (1 … 255)
Ymax: 0	Number of grid points in Y-direction (1 … 255)
Free: 41345 Samples	Free space

Tab. 8.20: “New Grid“ – menu items

Key assignment	Reaction
[1] / [7]	Select measurement frequency (cursor needs to be in line 1) ⓘ
[▲] / [▼]	Select Xmax or Ymax
[🡐]	Delete character
[0] … [9]	Numeric input of Xmax and Ymax
[RET]	Continue
[ESC]	Cancel

Tab. 8.21: Navigation through the “New Grid“ menu

ⓘ Once the frequency is selected, it is fixed for this file and cannot be changed afterwards!

1. Select frequency with [1] and [7]
2. Set number of grid points using the numerical keys
3. Confirm selection with [RET]

In the next step the mapping geometry has to be defined by means of dX, dY and L. dX and dY define the distance of grid points in X- and Y-direction, L the distance of the mobile electrodes.

One has: dX, dY, L > 0

```
New dX, dY, L
dX [m]:  0.5
dY [m]:  0.5
L  [m]:  0.1
```

Fig. 8.21: “New dX, dY, L“– definition of mapping geometry

Menu item	Function
New dX, dY, L	New mapping increments and new distance of electrodes
dX [m]: 0.5	Distance of grid points in X-direction
dY [m]: 0.5	Distance of grid points in X-direction
L [m]: 0.1	Distance of mobile electrodes ⓘ

Tab. 8.22: “New dX, dY, L“– menu items

Key assignment	Reaction
[▲] / [▼]	Select dX, dY, L
[←]	Delete character
[0] … [9]	Input ofdX, dY and L using the numerical keys
[RET]	Continue
[ESC]	Cancel

Tab. 8.23: Navigation through the “New dX, dY, L“ menu

4. Select dX, dY with [▲] and [▼], use numerical keys
5. Select L with [▲] and [▼], use numerical keys
6. Confirm selection with [RET]

ⓘ L will be saved but will not be used for calculating the apparent resistivity.

.

Auto mode ON

If in the standard mapping menu "Auto mode ON" was selected, the display now shows the menu "Auto Settings". ⓘ

```
Auto Settings
Min.Voltage: 50.0 mV
Error 0.2%
MaxAv  10
```

Fig. 8.22: Standard mapping “Auto Settings“

ⓘ If in the standard mapping menu "Auto mode OFF" was selected, you immediately enter the data browser (see below).

Menu item	Function
Auto Settings	Settings of "Auto mode ON"
Min. Voltage: 50.0 mV	Minimum input voltage for U0, format XX.Y (mV)
Error 0.2 %	Error
MaxAv 10	Maximum number of averages (1..255)

Tab. 8.24: “Auto Settings“ – menu items

Key assignment	Reaction
[⮝] / [⮟]	Select „Min. Voltage“ and „MaxAv“
[🡐]	Delete character
[RET]	Continue
[ESC]	Cancel

Tab. 8.25: Navigation through the “Auto Settings“ menu

1. Select Min. Voltage, Error or MaxAv with [⮝] and [⮟]
2. Change values by using the numerical keys
3. Confirm input with [RET]

Data browser

You are now in the **data browser**. If in the standard mapping menu "Auto mode OFF" was selected, you immediately enter the data browser from the grid parameters.

You have the following options:

- **Select a grid point** by using the X- and Y-coordinates and view the measurement data
- **Use the current grid point** and start a new measurement with [RET] (the displayed record/dataset will be overwritten)

```
rdy X23.45  Y23.45
100mA Avg99  4.16  A
U0 :1234.55mV  0.1%
U90: 10.22uV   13.5%
```

Fig. 8.23: Standard mapping: “Data browser“

Menu item	Function
rdy	The instrument is ready for measurement
X23.45	Current grid position (m)
Y23.45	Current grid position (m)
100 mA	Output current
Avg99	Number of averages
4.16	Frequency
A	**A**utomatic mode(or **m**anual mode)
U0	In-phase voltage
0.1 %	Error
U90	Out-of-phase voltage
13,5 %	Error

Tab. 8.26: “Data browser” – menu items

Key assignment	Reaction
[3] / [9]	Set number of averages
[2] / [8]	Navigate in Y-direction
[4] / [6]	Navigate in X-direction
[▲] / [▼]	Set output current
[5]	Change mode from **a**utomatic to **m**anual and v. v.
[🡐]	Delete current dataset/record
[RET]	Start measurement, overwrite current dataset/record
[ESC]	Cancel, return to the standard mapping menu

Tab. 8.27: Navigation through the standard mapping “Data browser”

Start measurement

1. Select grid point or use the current grid point
2. Start measurement with [RET]

Display during measurement

```
X: 2.4  Y:1.4
100nA Avg3  4.16  A
U0 :22.55mV  0.1%
U90: 18.22uV   13.5%
```

Fig. 8.24: Standard mapping: display during measurement

If "**Auto mode OFF**" was selected in the standard mapping menu, you return to the **data browser** after the measurement. The **next measurement has to be started** from the data browser again **by clicking [RET].**

If "**AUTO mode ON**" was selected in the standard mapping mode, the instrument asks you after each measurement to go to the next grid point and to **place the electrodes**. The **measurement** then **starts automatically**.

➔ 8.3.3 Automatic mode, page 58

At the end of the measurement you will see:

```
End of grid reached
Please press key...
```

Fig. 8.25: End of measurement

8.3.1.2 Output

After the measurement data have to be transmitted to the PC. The PC is connected to the instrument via the serial interface. Data transmission is either in ASCII or binary format. For transmission in binary format the program *Com4Point* is necessary.

Data transmission with *Com4Point*

Before data transfer the terminal program has to be started

→ *Start Com4point* on the PC

→ Set *Com4point* into receive mode

→ Start data transfer from the instrument to the PC

```
   MAPPING OUTPUT
Single File
All Files
```

Fig. 8.26: Data transfer

Single File

1. Select single file with [▲] and [▼]
2. Confirm input with [RET]

```
Standard mapping
File No: 0
(0..99)
Rec: 3
17.12.2013  09:26:26
```

Fig. 8.27: Transfer of a single file

Menu item	Function
File No: 0	File number
Rec: 3	Number of measured records/datasets
17.12.2013	Date of creation of this file
09:26:26	Time of creation of this file

Tab. 8.28: Output “Single File“– menu items

3. Select file with[▲] and [▼]
4. Confirm input with [RET]

Data transfer starts.

All Files

After selection of “All Files“ **all measured files are immediately transmitted** to the PC.

8.3.2 Multimapping

In multimapping mode, the instrument automatically performs measurements with different electrode configurations. A sequence of measurements could be: A4 – M3; A4 – M2; A4 – M1, thus giving three different penetration depths. Electrodes B and N are always used as remote electrodes. A typical example for the electrode configuration is shown in Fig. 8.28 .

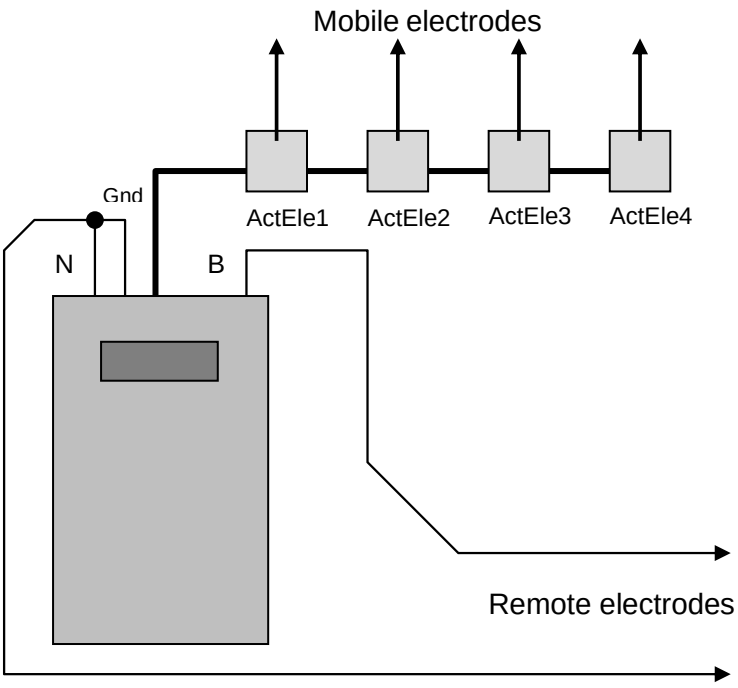

Fig. 8.28: Multimapping electrode configuration

The following connections to the instruments are to be made:

- Connect a string of **active electrodes** (up to 10, numbered from 1 to 10) to the instrument
- If necessary, connect **remote electrodes** (e. g. for pole-pole / pole-dipole measurements).
- The ground terminal of the instrument (**Gnd**) **must be connected properly**. In the example it is sufficient to connect the ground terminal with the remote potential electrode.

The measurements will be performed at one grid point in rapid succession.

```
VES MAP RMT TOM MON
CONTACT SP DELETE
SETTINGS MISC INFO
Battery:   5.52V
```

Fig. 8.29: Main menu

1. Select „MAP“ from the main menu with [⮝] and [⮟]
2. Confirm selection with [RET]

```
      MAPPING
Standard
Multimapping
```

Fig. 8.30: Mapping mode

3. Activate mapping mode with [RET]

```
    MULTIMAPPING
Run Edit Delete
Output
```

Fig. 8.31: Multimapping menu

1. Select „Run“ with [▲] and [▼]
2. Confirm selection with [RET]

8.3.2.1 Run

Define parameter file before starting the measurement.

During the measurement the program uses a parameter file which has to be defined in advance!

➔ 8.3.2.2 Edit, page 56

```
Multimapping
File No: 2  (0..9)
Auto mode: ON
Empty
```

Fig. 8.32: Multimapping “Run”

Menu item	Function
File No: 2	File number (0 … 9)
Auto mode: ON	Automatic mode ON/OFF
Empty	Status line: file is empty

Tab. 8.29: Multimapping –menu items

In multimapping mode data are saved to an empty file only!

Key assignment	Reaction
[▲]/[▼]	Select file number
[🡐]	Select automatic mode ON/OFF
[RET]	Continue
[ESC]	Cancel

Tab. 8.30: Navigation through the multimapping menu

1. Select file number with [▲] and [▼]
2. Select automatic mode ON or OFF with [🡐]
3. Confirm selection with [RET]

```
New Grid       4.16Hz
Xmax:  0      (1..255)
Ymax:  0      (1..255)
Free:   6345 Samples
```

Fig. 8.33: Definition of a new grid

Menu item	Function
New Grid	New grid
4.16Hz	Measurement frequency
Xmax: 0	Number of grid points in X-direction (1 … 255)
Ymax: 0	Number of grid points in Y-direction (1 … 255)
Free: 41345 Samples	Free space

Tab. 8.31: “New grid” – menu items

Key assignment	Reaction
[1] / [7]	Select measurement frequency (cursor needs to be in line 1) ⓘ
[▲] / [▼]	Select Xmax or Ymax
[🡐]	Delete character
[0] … [9]	Numeric input of Xmax and Ymax
[RET]	Continue
[ESC]	Cancel

Tab. 8.32: Navigation through the menu “New Grid“

ⓘ **Once the frequency is selected**, it is fixed for this file and **cannot be changed** afterwards!

4. Select frequency with [1] and [7]
5. Set number of grid points using the numerical keys
6. Confirm selection with [RET] ⓘ

```
Multimapping
Parameter set: 0
```

Fig. 8.34: Select parameter set

7. Select parameter set with [▲] and [▼]
8. Confirm input with [RET

In the next step **the mapping geometry has to be defined** by means of dX, dY and L. dX und dY define the distance of grid points, L the distance of the mobile electrodes. ⓘ

On has: dX, dY, L > 0

```
New dX, dY, L
dX [m]:  0.5
dY [m]:  0.5
L  [m]:  0.1
```

Fig. 8.35: Definition of mapping geometry

Menu item	Function
New dX, dY, L	New mapping increments and new distance of electrodes
dX [m]: 0.5	Distance of grid points in X-direction
dY [m]: 0.5	Distance of grid points in X-direction
L [m]: 0.1	Distance of mobile electrodes ⓘ

Tab. 8.33: “New dX, dY, L“ – menu items

Key assignment	Reaction
[▲] / [▼]	Select Xmax, Ymax or L
[🡐]	Delete character
[0] … [9]	Numerical input or Xmax, Ymax or L
[RET]	Continue
[ESC]	Cancel

Tab. 8.34: Navigation through the menu “New dX, dY, L“

L will be saved but will not be used for calculating the apparent resistivity.

9. Select dX, dY with [▲] and [▼]
10. Delete characters with [🡐], input via numerical keys
11. Select L with [▲] and [▼]
12. Delete characters with [🡐], input via numerical keys
13. Confirm selection with [RET]

If the instrument is ready to start you will see:

```
rdy  X0.00  Y0.00  0
1uA 1234 A3  f4.2  A
U0 : 23.55mV  0.2%
U90: 10.22uV   12.0%
```

Fig. 8.36: Multimapping data browser

Menu item	Function
rdy	The instrument is ready for measurement
X0.00	Current grid position (m)
Y0.00	Current grid position (m)
0	Line number of measurement sequence
1µA	Output current
1234	Sequence of electrodes to be measured next (A-B-M-N)
A3	Number of averages
f4.2	Frequency
A	**A**utomatic mode (or **m**anual)
U0	In-phase voltage
0.1%	Error
U90	Out-of-phase voltage
13,5%	Error

Tab. 8.35: Multimapping data browser – menu items

Key assignment	Reaction
[3] / [9]	Set number of averages
[2] / [8]	Navigate in Y-direction ⓘ
[4] / [6]	Navigate in X-direction ⓘ
[▲] / [▼]	Set output current
[5]	Change mode from automatic to manual and v. v.
[←]	Delete values in current dataset
[RET]	Start measurement, overwrite current dataset/record
[ESC]	Cancel

Tab. 8.36: Navigation through the multimapping data browser

ⓘ If navigating through the records with the keys [2] / [8] or [4] / [6] the instrument will only display the measured values of the first electrode sequence.

8.3.2.2 Edit

```
Multimapping
Edit Parameter
Parameter set: 0
```

Fig. 8.37: Multimapping: “Edit parameter”

1. Select parameter set with [▲] and [▼]
2. Confirm with [RET]

```
Set: 0   Line: 3
A4    B0    M3    N0
A4    B0    M2    N0
A4    B0    M1    N0
```

Fig. 8.38 Muttimapping parameter set

Menu item	Function
Set: 0	Number of parameter set
Line: 3	Cursor position (line)
A4 B0 M3 N0	Electrode combinations

Tab. 8.37: Multimapping parameter set

Key assignment	Reaction
[▲] / [▼]	Select parameter
[🡐]	Delete character
[0] … [9]	Enter numerical values
[RET]	Continue
[ESC]	Cancel

Tab. 8.38: Navigation through the multimapping parameter set

Up to 10 lines (0 ... 9) of electrode combinations are possible. The instrument will stop automatically at the first line where all parameters are set to 0 (A0 B0 N0 M0 is the default setting). For the example above this would be the case in line 4.

3. After editing a parameter file, exit this menu with [ESC]
5. Start measurement under “Multimapping” “Run”

8.3.2.3 Delete

Under “Delete” the contents of individual parameter sets can be deleted. The electrodes A/B/M/N are set to 0 (default setting)

8.3.2.4 Output

After the measurement the data have to be transmitted to the PC. The PC is connected to the instrument via the serial interface. Data transmission is either in ASCII or binary format. For transmission in binary format the program *Com4Point* is necessary.

Data transmission with *Com4Point*

Before the data transfer the terminal program has to be started

→ *Start Com4point* on the PC

→ Set *Com4point* into receive mode

→ Start data transfer from the instrument to the PC

```
MULTI-MAPPING OUTPUT
Single File
All Files
```

Fig. 8.39: Data transfer

Single File

5. Select single file with [▲] and [▼]
6. Confirm input with [RET]

```
Multimapping
File No: 0     (0..99)

17.12.2013  09:26:26
```

Fig. 8.40: Transfer of a single file

Menu item	Function
File number: 0	File number
17.12.2013	Date of creation of this file
09:26:26	Time of creation of this file

Tab. 8.39: Output „Single File“ – menu items

1. Select file with [▲] and [▼]
2. Confirm input with [RET]

Data transfer starts.

All Files

After the selection of „All Files“ **all measured files are immediately transmitted** to the PC.

8.3.3 Automatic mode

In **auto mode (ON)** the sequence of **actions** taken by the instrument is **as follows**:

First measurement

1. Check for closed circuit at AB
2. Increase of current until minimum voltage is reached
3. Measurement is performed; during the measurement the instrument checks if the circuit is still closed. ⓘ
4. As soon as the preset number of averages is reached, data are stored
5. At the end of a measurement an acoustic signal sounds
6. One step decrement of output current

Further measurements

7. The instrument waits for an open circuit (lifting of the electrodes)
8. The instrument waits until the circuit is closed again (placing the electrodes)
9. The instrument waits 100 msec (debouncing)
10. One step increment of current
11. Measurement is performed. The instrument checks if the input voltage is high enough and if the circuit is still closed. ⓘ
12. At the end of a measurement an acoustic signal sounds
13. Coordinates are incremented.

ⓘ If the circuit is not closed, the measurement will be restarted.

8.4 Remote mode

In the remote mode, data acquisition is determined externally by a PC. Select “RTM” from the main menu to switch to remote mode.

```
VES MAP RMT TOM MON
CONTACT SP DELETE
SETTINGS MISC INFO
Battery:   5.52V
```

Fig. 8.41: Main menu

1. Select “RMT” from the main menu with [▲] and [▼]
2. Confirm selection with [RET]

```
Remote mode
<RET> Activate
<ESC> Cancel
```

Fig. 8.42: Remote mode

3. Activate remote mode with [RET]

```
IDL 1.04Hz   5mA OFF
A012 B013 M014 N015
U0:   123.45mV    on
U90:  1.23mV   ASCII
```

Fig. 8.43: Display during measurement in remote mode

Menu item	Function
IDL /AQU	State of the instrument: IDL – idle/waiting for commands or AQU – data acquisition active
1.04 Hz	Frequency
5 mA	Output current
OFF	State of transmitter
A012 … N015	Current configuration of active electrodes
U0	In phase voltage
on	State of power supply for external electrodes on/off
U90	Out of phase voltage
ASCII	Setting of data transmission protocol (ASCII/binary)

Tab. 8.40: Display during measurement in remote mode

All functions of the instrument can be controlled remotely via the serial interface. The interface is isolated from the instrument so there is no need to worry about ground loops. The interface circuit of the instrument is powered by the interface of the PC connected. **This requires a standard RS232 interface at the PC.**

8.4.1 Sending commands to the instrument

Instruction length for the instrument instructions is 1 byte. The instrument always confirms a valid instruction with sending back the instruction byte. Invalid instructions will result in a “?”-byte sent back. The control computer connected always must wait for the return byte before sending a new instruction. Selection of frequency depends on the settings of the instrument defined under the menu item "Acquisition" "Country".

➔ 8.10.4 Acquisition, page 99

Instruction ⓘ	Code	ASCII character
Select frequency 1: 0,26 / 0,312 Hz	97	a
Select frequency 2: 0,52 / 0,625 Hz	98	b
Select frequency 3: 1.04 / 1.25 Hz	99	c
Select frequency 4: 2.08 / 2,5 Hz	100	d
Select frequency 5: 4.16 / 5 Hz	101	e
Select frequency 6: 8.33 / 10 Hz	102	f
Select frequency 7: 12.5 / 15 Hz	103	g
Select frequency 8: 25 / 30 Hz	104	h
Current level 1: 1 µA	109	m
Current level 2: 10 µA	110	n
Current level 3: 100 µA	111	o
Current level 4: 1 mA	112	p
Current level 5: 5 mA	113	q
Current level 6: 15 mA	114	r
Current level 7: 50 mA	115	s
Current level 8: 100 mA	116	t
Software version		v
External voltage		w
Output data format ASCII (preset)		y
Output data format binary		z
Perform single measurement	77	M
Measure transmitter output voltage	78	N
Measure battery voltage	79	O
Measure self-potential	80	P
Continuous measurement ON	81	Q

Continuous measurement OFF	82	R
Transmitter ON	83	S
Transmitter OFF	84	T
Wake up via serial interface	85	U
Turn instrument off	86	V
External electrodes ON	87	W
External electrodes OFF	88	X

Tab. 8.41: Remote instructions to the instrument

If **frequency or output current is changed during continuous measurement, output values may be wrong for up to about 0.5 seconds after the change** occurred due to receiver/transmitter setting times. Take this into account during the evaluation.

8.4.2 Sending commands to the electrodes

Instruction length for electrode instructions is 2 bytes. The second byte is the number of the target electrode.

The active electrodes work with a predefined baud rate of 1200 baud. The instrument automatically converts any input baud rate to 1200 baud.

Instruction	Code	ASCII character
A	65	A
B	66	B
M	67	C
N	68	D
A OFF	69	E
B OFF	70	F
M OFF	71	G
N OFF	72	H
Reset	73	I
Reprogramming of electrode number	74	<J><U><SNalt><SNneu><SNneu><SNneu>

Tab. 8.42: Remote instructions for electrodes

The **electrode commands always have to be sent completely (2 Bytes).** The instrument will react on further commands only if the second Byte was received.

8.4.3 Possible error messages

In the remote mode the following error messages of the instrument are possible:

General errors

Error message	Cause
ovld	Overload condition at the ADC
open	The output current circuit is open or the transmitter maximum voltage is not sufficient to send the required current to the electrodes.

Tab. 8.43: Possible general error messages in remote mode

If one of those error conditions occurs during continuous measurement, the instrument tries to acquire a valid measurement after about 50 msec again.

Error messages after current change

If the current is increased (command ´m` … ´t`) the instrument checks, whether the power supply is above a defined threshold and whether the selected current can be reached. If not, an error message will be sent. If the current is decreased only the selected current will be checked.

An overview of the reactions of the instrument after current changes provides Fig. 8.44:

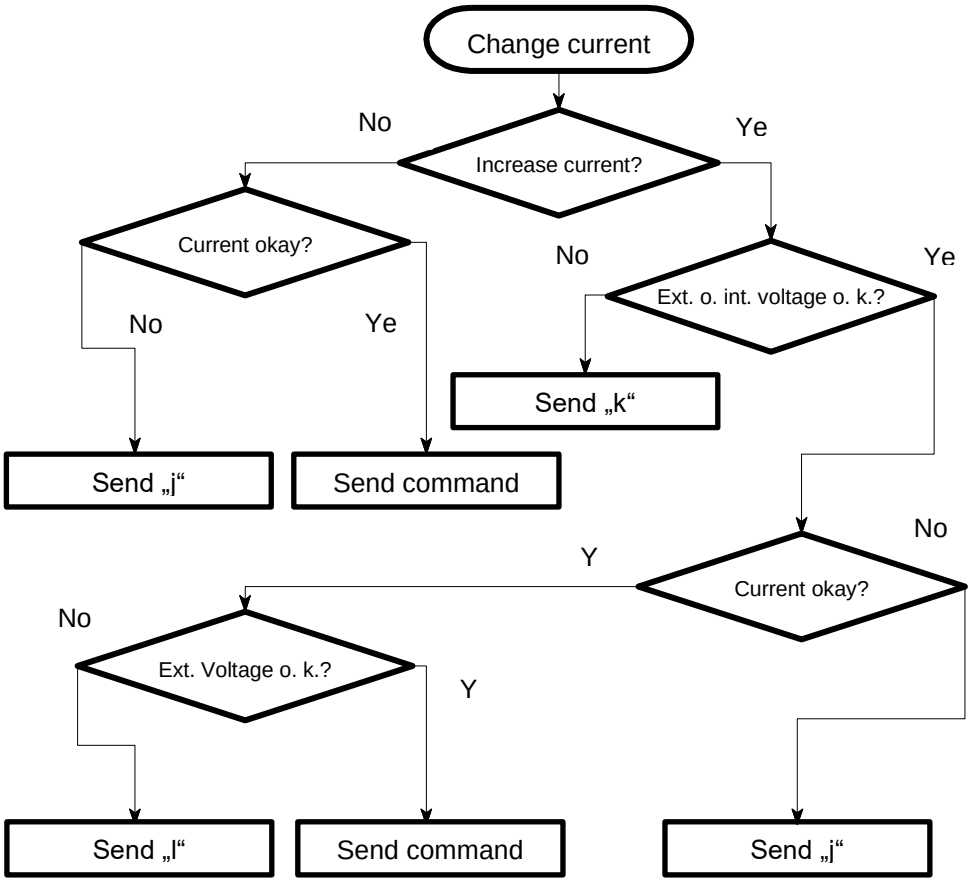

Fig. 8.44: Reaction on current changes

Error message	Cause
l	External voltage below threshold
k	Int. and ext. voltage below threshold
j	Current does not meet the defined target

Tab. 8.44: Current changes – error messages

If only the external voltage is below the threshold the instrument will be supplied by the internal batteries. Measurements can go on.

Error messages after switching on the transmitter

After switching on the transmitter the instrument checks whether the power supply is above the threshold or not. If not, an error message will be sent.

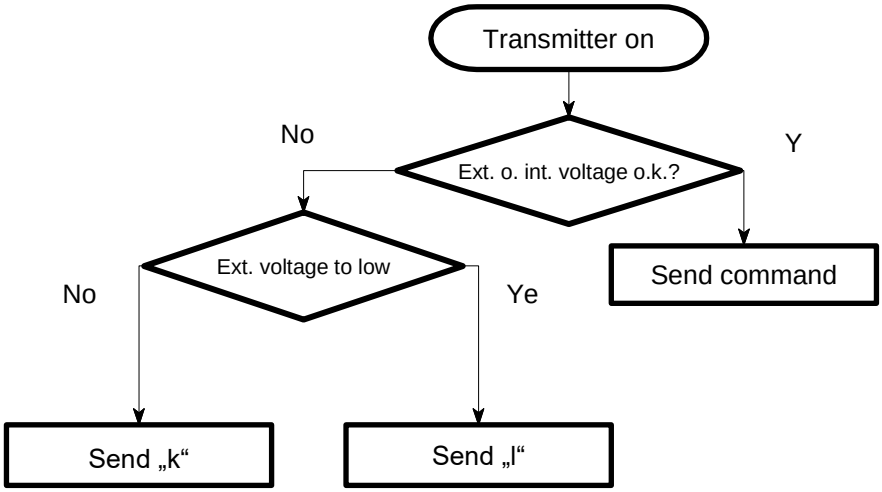

Fig. 8.45: Reaction on switching on the transmitter.

Error message	Cause
l	External voltage below threshold
k	Int. and ext. voltage below threshold

Tab. 8.45: Transmitter is switched on – error messages

For further troubleshooting please refer to chapter

➔ 9.2 Error messages in remote mode, page 113

8.4.4 Remote mode directly after startup

If **Remote** is selected, the mode starts as soon as the device is started.

To use the mode, proceed as follows:

Preconditions

1. Under **Settings | Device | Startup**, select the start mode **Remote**.

If the device is "woken up" again, e.g. by

- pressing a key or by
- applying external voltage, or by
- the reception of one or more characters 'U' via the serial interface,

then **Remote** mode is automatically started.

8.5 Tomography mode

In tomography mode data acquisition is performed by using a chain of active electrodes (“ActEle”) with up to 100 electrodes. Before measurement parameter sets are to be loaded via the serial interface. The instrument stores the measured data in a "file", up to 10 files are possible. For further processing these files are to be transferred to the PC.

The option “response to keystroke” can be activated ➔8.10.1 Device, page 92

Structure of tomography and parameter data ➔10.2.4 Tomography, page 119

```
VES MAP RMT TOM MON
CONTACT SP DELETE
SETTINGS MISC INFO
Battery:   5.52V
```

Fig. 8.46: Main menu

1. Select “TOM” from the main menu with [▲] and [▼]
2. Confirm selection with [RET]

```
TOMOGRAPHY
Load Show Delete
Run Continue
Output Rmt
```

Fig. 8.47: Tomography – menu items

Menu item	Function
Load	Load parameter sets either directly using the program GEOTEST or by any other terminal program via the serial interface.
Show	Parameter sets which are stored on the instrument are shown.
Delete	ALL parameter sets are deleted. Parameter sets cannot be deleted individually but only as a whole.!
Run	Start data acquisition in tomography mode
Continue	Continue with an incomplete data acquisition file
Output	Transfer of the acquired data to the PC
RMT	Remote control of tomography data acquisition

Tab. 8.46: Tomography – menu items

8.5.1 Load

Under the menu item “Load“ up to 10 parameter sets can be loaded onto the instrument The parameter sets are numbered from 0 to 9. If the number is already in use, this parameter set cannot be overwritten on the instrument.

Warning of data loss

→ Make sure that the COM settings of both the instrument and the PC are identical. ➔ 8.10.2 Communication, page 96

---

1. Select “Load” from the tomography menu with [▲] and [▼]
2. Confirm selection with [RET]

```
Receive Parameter
Parameter set: 2

Empty!
```

Fig. 8.48: Load parameter set

3. Select parameter set number (status “Empty!”) with [▲] and [▼]

“Empty!” indicates that the number has not been assigned yet and there is free space.

4. Load parameter set with [RET]

```
Receive Parameter
Parameter set: 2
Ready for data....
```

Fig. 8.49: Instrument is ready for data transfer

Parameter set is loaded via the serial interface...

```
Receive Parameter
Parameter set: 2
Header ok.....
Finshed!   150 sets
```

Fig. 8.50: Data transfer is successfully finished

5. Back to the tomography menu with [RET] or [ESC]

8.5.2 Show

Under the menu item “Show” parameter sets can be selected and viewed individually.

For further explanations of the parameters refer to ➔ 10.2.4 Tomography, page 119

1. Select “Show” from the tomography menu with [▲] and [▼]
2. Confirm input with [RET]

```
Show parameter set
Parameter set: 0

080424Test
```

Fig. 8.51: Parameter set, page 1

3. Select number of parameter set with [▲] and [▼]
4. Confirm input with [RET]

Page 2 appears:

```
080424Test
DIPOL-DIPOL  F:8.33
V:50.00 A:5  Er:3.0
D:2.000 F:1  L:100
```

Fig. 8.52: Parameter set, page 2

Parameters	Function
080424Test	Comment line from parameter set
DIPOL-DIPOL	Type of measurement
F:8.33	Frequency (Hz)
V:50.00	Voltage (V)
A:5	Number of averages
Er:3.0	Tolerated error (%)
D:2.000	Distance of electrodes (m)
F:1	First electrode
L:100	Last electrode

Tab. 8.47: Parameters , page 2

6. Confirm input with [RET]

Page 3 appears:

```
Set: 0  Line: 0
A1   B2   M4   N3
A2   B3   M5   N4
A3   B4   M6   N5
```

Fig. 8.53: Parameter set, page 3

Parameters	Function
Set 0	Parameter set
Line: 0	Line, numbering starts with „0“
A1 B2 M4 N3	Line 0
A2 B3 M5 N4	Line 1
A3 B4 M6 N5	Line 2

Tab. 8.48: Parameters, page 3

7. Browse through electrode combinations with [⮝] and [⮟]
8. Back to the tomography menu with [RET] or [ESC]

8.5.3 Delete

Under the menu item “Delete” all saved parameter sets can be deleted.

Warning of data loss

Clicking [RET] will delete ALL parameter sets. The parameter sets cannot be deleted individually.

1. Select “Delete” from the tomography menu with [⮝] and [⮟]
2. Confirm with [RET]

```
Delete parameter?
<RET> Delete
<ESC> Abort
```

Fig. 8.54: Delete ALL parameter sets

3. Delete all parameter sets witch [RET]
4. Back to the tomography menu with [ESC]

8.5.4 Run

Under the menu item “Run” measurement in tomography mode is started.

1. Select “Run” from the tomography menu with [▲] and [▼]
2. Confirm input with [RET]

```
Run tomography
Parameter set: 0

080424Test
```

Fig. 8.55: Select parameter set

3. Select number of parameter set with [▲] and [▼]
4. Confirm input with [RET]

```
Electrode parameter
Distance[m]: 2.000
Position[m]; 0.000
First: 1   Last:89
```

Fig. 8.56: Edit electrode parameters

Parameters	Function
Distance[m] ⓘ	Set distance between electrodes (m)
Position[m] ⓘ	Set the start position of the profile in (m)
First: 1	Set first electrode
Last: 89 ⓘ	Set last electrode

Tab. 8.49: Electrode parameters

5. Edit electrode parameters by using the numerical keys and [←]
6. Move to the next line with [▲] and [▼]
7. Confirm input with [RET]

```
Measurement param.
Min. volt[mV]: 20.00
Max. error[%]: 0.1
Avg:8
Frq:2.08
```

Fig. 8.57: Edit measurement parameters

Parameters	Function
Min. volt[mV]: 20.00 ⓘ	Set minimum requested receiver voltage (mV)
Max. error[%]: 0.1 ⓘ	Set maximum permitted error value for U0 (%)
Avg:8	Set max. number of averages
Frq:2.08	Set measurement frequency (Hz)

Tab. 8.50: Measurement parameters

8. Edit measurement parameters by using the numerical keys and [🡐]
9. Move to the next line with [🡅] and [🡇]
10. Confirm input with [RET]

```
Run tomography
File: 3
Empty!
```

Fig. 8.58: Select empty file

11. Select under "File" an empty file with [🡅] and [🡇]

Status must be "Empty!" ⓘ

12. Start measurement with [RET]

```
f0.26 100u  56/1695
A1   B2   M4   N3
U0 34.78mV  0.06%  4
U90 87.79uV  4.5%
```

Fig. 8.59: Status of measurement is displayed

Display	Function
f0.26	Measurement frequency (Hz)
100u	Output current (µA)
56/1695	Number of data point (x out of total)
A1 B2 M4 N3	Currently active electrodes
U0 34.78 mV	In-phase receiver voltage U0
0.06 % 4	Error value (%) Number of averages
U90 87.79 uV	Out-of-phase receiver voltage U90
4.5 %	Error value (%)

Tab. 8.51: Display during measurement

Data transmission can be cancelled at any time by clicking [ESC]. After measurement the program automatically switches back to the tomography menu.

Distance: The ActEle tomography system is delivered with electrode takeouts at regular intervals However, in the field actual electrodes can be different. A system with 5 m takeouts for example can also operate with electrode distances of 1 m.

First/Last: Setting first and last electrodes is useful when the system cannot be laid out completely. This means (referring to the example above): although the parameter file was made for a system of 100 electrodes only 89 electrodes are used.

Min. volt/Max. error: For highest possible IP resolution select input voltages of 20 mV or more and error values of 0.1 %. A high IP resolution, however, may cause longer measurement times. If time is critical, increase the error threshold to approximately 1 % and work with measurement frequencies ≥ 4 Hz.

Empty! Tomography measurement will only start if the data storage file is empty (Status “Empty!”). If the file is not empty, date and time of the measurement will be displayed.

8.5.5 Continue

Under the menu item “Continue” an interrupted measurement can be continued.

1. Select “Continue” from the tomography menu with [▲] and [▼]
2. Confirm input with [RET]

```
Continue tomography
File: 3

25.04.2021  09:06:13
```

Fig. 8.60: Continue interrupted measurement

3. Under “File” select the file number of interrupted data acquisition with [▲] and [▼]

   The status line shows date and time of the interrupted measurement

4. Confirm input with [RET]

```
f0.26 100u  56/1695
A1   B2   M4   N3
U0 34.78mV  0.06%  4
U90 87.79uV  4.5%
```

Fig. 8.61: Status of measurement is displayed

The measurement can be cancelled at any time by clicking [ESC]. After measurement the program automatically switches back to the tomography menu.

8.5.6 Output

Under the menu item “Output” the acquired data are transmitted to the PC via the serial interface.

1. Select “Output” from the tomography menu with [▲] and [▼]
2. Confirm selection with [RET]

```
Output tomography
File: 3

25.04.2021  09:06:13
```

Fig. 8.62: Start data transfer to the PC

3. Select file under “File” with [▲] and [▼]
4. The status line shows date and time of the measurement
5. Start data transmission with [RET]

```
Output tomography

Please wait...
```

Fig. 8.63: Data transfer is running

Data transfer can be cancelled at any time by clicking [ESC]. After data transfer the program automatically switches back to the tomography menu.

Data transfer to the PC: Data are transferred to the PC via the serial interface. To receive the data the program GEOTEST can be used or any other terminal program (e.g. WINDOWS Terminal or Hyperterminal).

8.5.7 Remote

Under the menu item “RMT” the instrument can be switched to the remote mode.

1. Select “Rmt” from the tomography menu with [▲] and [▼]
2. Confirm selection with [RET]

```
Remote mode
<RET> Activate
<ESC> Cancel
```

Fig. 8.64: Remote mode

3. Activate remote mode with [RET]
4. Deactivate remote mode with [ESC]

8.6 Monitoring mode

Under the menu item “Monitoring” the instrument repeats data acquisition in tomography mode in fixed intervals. For this purpose either a set of active electrodes ("ActEle") is connected or a stationary set of four electrodes. ⓘ

Data are saved to the internal memory of the instrument. After the measurement data are transmitted

- to the PC by using the serial interface or
- to the FTP server via the mobile phone network using GPRS. ➔ 8.6.5 Run, page 80

```
VES MAP RMT TOM MON
CONTACT SP DELETE
SETTINGS MISC INFO
Battery:   5.52V
```

Fig. 8.65: Main menu

1. Select “MON” from the main menu with [↑] and [↓]
2. Confirm selection with [RET]

```
MONITORING
Load Edit Delete New
Run Continue
Output results
```

Fig. 8.66: Monitoring menu

Menu item	Function
Load	Load parameter set either directly using the program GEOTEST or by any other terminal program via the serial interface.
Edit	Edit parameter sets stored in the instrument
Delete	Delete ALL parameter sets
New	Create new parameter set
Run	Start data acquisition in tomography mode
Continue	Continue an interrupted data acquisition
Output results	Data transmission to the PC

Tab. 8.52: Monitoring – menus items

3. Select menu item by clicking [▲] or [▼]
4. Confirm selection with [RET]

Maximum number of records is approximately 320 000; using a tomography setup with 20 electrodes in Wenner mode this translates into about 7 cycles per day for one year. .

If an additional sensor is installed, the instrument also will register its internal temperature. The sensor is available on request.

8.6.1 Load

Under the menu item "Load" parameter sets can be transmitted via the serial interface from the PC to the instrument. Use GEOTEST or another terminal program for this purpose.

Warning of data loss

→ Make sure that the COM settings of both the instrument and the PC are identical ➔ 8.10.2 Communication, page 96

```
Receive Parameter
Parameter set: 2

Empty!
```

Fig. 8.67: Select parameter set number

1. Select parameter set number (status “Empty!”) with [▲] and [▼]

   “Empty!” indicates that the number has not been assigned yet and there is free space.

2. Load parameter set with [RET]

   The instrument waits for a parameter set which is transferred via the serial interface. ⓘ

```
Receive Parameter
Parameter set: 2
Ready for data....
```

Fig. 8.68: Load parameter

Data are transferred.

If data transfer was successful the display shows the following message:

```
Receive Parameter
Parameter set: 2
Header ok.....
Finished!   150 sets
```

Fig. 8.69: End of data transfer

3. Continue with [RET] or [ESC]

The instrument can save 10 parameter sets. They are numbered from 0 to 9. In order to be able to receive a new parameter set, the status of the selected number must be "Empty". If the number is already in use, the status line shows a date and a time instead of "Empty". The data cannot be overwritten. Another number has to be selected.

8.6.2 Edit

```
Edit parameter set
Parameter set: 0

13.10.2021  15:04:05
```

Fig. 8.70: Select parameter set

1. Select parameter set with [▲] and [▼]
2. Confirm selection with [RET]

```
Set: 0  Line: 1/4
A4  B0 M3 N0
A4  B0 M2 N0
A4  B0 M1 N0
```

Fig. 8.71: Select electrode combinations

Menu item	Function
Set: 0	Number of parameter set
Line: 1/4	Cursor position: in line 1 of 4
A4 B0 M3 N0	Electrode combination

Tab. 8.53: Edit – menu items

Key assignment	Reaction
[▲] / [▼]	Selection of A, B, M, N or next line
[←]	Delete character
[0] … [9]	Input of numerical values for A, B, M and N
[RET]	Confirm input and continue

Tab. 8.54: Navigation through the edit menu

3. Select electrodes with [▲] and [▼]
4. Set electrode numbers by using numerical keys ⓘ
5. Confirm input with [RET]

ⓘ If in one line each index is 0 (default setting), end of parameter set is reached.

8.6.3 Delete

Under the menu item “Delete” all saved parameter sets can be deleted.

Warning of data loss

Clicking [RET] will delete ALL parameter sets. The parameter sets cannot be deleted individually.

```
Delete parameter?
<RET> Delete
<ESC> Abort
```

Abb. 8.72: Delete ALL parameter sets

1. Delete all parameter sets witch [RET]
2. Back to the monitoring menu with [ESC]

8.6.4 New

Under the menu item “New” a new parameter set can be created and the parameters can be edited. At first select a number for the new parameter set.

- If the number is already in use and the comment line of the parameter set is displayed, the instrument shows date and time of creation. Select another number until you see “Empty!” on the screen.
- If the parameter set is empty, the parameters can be edited.

```
New parameter set
Parameter set : 0

Empty!
```

Abb. 8.73: Create new parameter set

1. Select a number for the new parameter set (status **must** be “Empty!”) with [⮝] and [⮟]
2. Confirm selection with [RET]

```
Measurement param.
Min. volt[mV]: 20.00
Max. error[%]: 0.1
Avg:8      Frq:2.08
```

Fig. 8.74: Edit measurement parameters

Menu item	Function
Min. volt (mV)	Minimum required receiver voltage
Max. error (%)	Maximum permitted error value for U0
Avg: 8	Maximum numbers of averages
Frq: 2.08	Measurement frequency

Tab. 8.55: Measurement parameters – menu items

Key assignment	Reaction
[▲] / [▼]	Select parameter
[🡐]	Delete character
[0] … [9]	Enter numerical values
[ESC]	Cancel
[RET]	Confirm input and continue

Tab. 8.56 Navigation through measurement parameters

3. Input parameters by using the numerical keys.
4. Confirm input with [RET]

```
Electrode param.
Distance [m] 1.000
```

Abb. 8.75: Set electrode distance

5. Input electrode distance by using the numerical keys.
6. Confirm input with [RET]

```
Set: 0  Line: 1/4
A4  B0 M3 N0
A4  B0 M2 N0
A4  B0 M1 N0
```

Fig. 8.76: Select electrode combination

Menu item	Function
Set: 0	Number of parameter set
Line: 1/4	Cursor position: in line 1 of 4
A4 B0 M3 N0	Electrode combination

Tab. 8.57: Electrode combinations – menu items

Key assignment	Reaction
[▲] / [▼]	Selection of A, B, M, N or next line
[🡐]	Delete character
[0] … [9]	Input of numerical values for A, B, M and N
[RET]	Confirm input and continue

Tab. 8.58: Navigation through the electrode combinations

1. Select electrodes with [▲] and [▼]
2. Set electrode numbers by using numerical keys. ⓘ
3. Confirm input with [RET]

ⓘ If in one line each index is 0 (default setting), end of parameter set is reached.

8.6.5 Run

Under the menu item “Run” data acquisition in the monitoring mode is started.

ⓘ In **GPRS mode data are transmitted automatically** via **G**eneral **P**acket **R**adio **S**ervice (GPRS) **to a FTP server** after each measurement block. Data transfer is integrated in the measurement, no interaction of the user with the instrument is necessary..

Select a parameter set: the **parameter set may not be empty**, this means instead of “Empty!” there has to be a comment in the status line.

```
Run monitoring
Parameter set : 0

Wenner data acquisition
```

Fig. 8.77: Select parameter set

1. Select a parameter set with [▲] and [▼]
2. Confirm selection with [RET]

```
Measurement param.
Min. volt[mV]: 20.00
Max. error[%]: 0.1
Avg:8       Frq:2.08
```

Fig. 8.78: Edit measurement parameters

Menu item	Function
Min. volt [mV]	Minimum required receiver voltage
Max. error [%	Maximum permitted error value for U0
Avg: 8	Maximum numbers of averages
Frq: 2.08	Measurement frequency

Tab. 8.59: Measurement parameters – menu items

Key assignment	Reaction
[▲] / [▼]	Select parameter
[🡐]	Delete character
[0] … [9]	Enter numerical values
[ESC]	Cancel
[RET]	Confirm input and continue

Tab. 8.60: Navigation through measurement parameters

3. Change parameters by using the numerical keys.
4. Confirm input with [RET]

```
Monitoring mode
Mode: Standard
```

Fig. 8.79: Select measurement mode

5. Select monitoring mode via [BS].

The following modes are selectable: “Standard”, “GPRS”, “Remote”, “Power sync”, “Serial sync”, “RTC sync”

➔ 8.6.9 Monitoring measurement immediately after starting, page 86

In “Standard” mode and in “GPRS” mode it goes on as follows:

```
Monitoring param.
Start:
01.01.2022 00:00:00
```

Fig. 8.80: Edit start time of measurement

6. Set date / time for the start of the measurement by using the numerical keys.

Format of date: „dd.mm.yyyy“, format of time: „hh.mm.ss“. If start time has already passed, monitoring will start immediately as soon as all parameters are available.

7. Confirm input with [RET]

```
Monitoring param.
Start:
01.01.22 00:00:00
Interval:01:00:00
```

Fig. 8.81: Edit intervals

8. Set monitoring intervals by using the numerical keys.

Format of monitoring interval: „hh.mm.ss“

9. Confirm input with [RET]

This again applies to all modes:

```
Run monitoring
File: 4      n: 1234
End in: 1790d 5h
Empty!
```

Fig. 8.82: Available memory

Menu item	Function
File 4	File number
n: 1234	Number of records, which can still be saved ⓘ
End in 1790d 5h	Storage capacity in days (d) / hours (h)
Empty!	Memory must be empty. If date and time are shown in the status line, the file is not empty. Browse through the file numbers as long as “Empty!” is displayed

For **measurements in RunGPRS mode free memory should be available for up to 30 data blocks** (n=30). Only then the measured data can be buffered long enough, e. g. in case of data transfer problems. ➔8.6.8 GPRS, page 85

10. Select an empty file with [▲] and [▼]
11. Confirm selection with [RET]

```
Monitoring 75 at
14.10.2021 17:20:00
14.10.2021 16:21:46
18.2C i5.25 e12.45 V
```

Fig. 8.83: Waiting state

Parameters	Function
75	Record number for next measurement
14.10.2021 17:20:00	Date / time for the next measurement
14.10.2021 16:21:46	Current date / time
18,2 C	Temperature
i5.25	Internal battery voltage

e12.45 V	External supply voltage

Tab. 8.61: Waiting state – explanation

12. Wait until data acquisition starts

```
f8.33  100u  8 /57
A1  B2   M4   N3
U0 34.78mV  0.06%  4
U90 87.79uV   4.5%
```

Fig. 8.84: Display during data acquisition

Parameters	Function
F8.33	Measurement frequency
100 µ	Output current
8 / 57	Number of data point (x out of total)
A1 B2 M4 N3	Currently active electrodes
U0 34.78 mV	In-phase receiver voltage U0
0.06 %	Error
4	Number of averages
U90 87.79 µV	Out-of-phase receiver voltage U90
4.5 %	Error

Tab. 8.62: Display during data acquisition – explanations

13. Cancel data acquisition with [ESC]

8.6.6 Continue

If the measurement was cancelled, you can go on with the measurement by selecting “Continue” in the monitoring menu. A new record will be created; the interrupted record will not be completed.

In GPRS mode the data blocks are transferred via modem to the FTP server after acquisition.

```
Continue monitoring
File: 3

13.10.2021  15:04:05
```

Fig. 8.85: Continue data acquisition

1. Select file of cancelled data acquisition with [⮝] and [⮟]
2. Confirm selection with [RET]

```
Monitoring 75 at
14.10.2021 17:20:00
14.10.2021 16:21:46
18.2C i5.25 e12.45 V
```

Fig. 8.86: Waiting state

Parameters	Function
75	Record number for next measurement
14.10.2021 17:20:00	Date / time for the next measurement
14.10.2021 16:21:46	Current date / time
18,2C	Temperature
i5.25	Internal battery voltage
e12.45V	External supply voltage

Tab. 8.63: Monitoring mode – waiting state

The instrument will continue data acquisition automatically at the date and the time which are set for the next measurement.

8.6.7 Output

Under the menu item “Output” the acquired data are transmitted to the PC via the serial interface.ⓘ

If data acquisition was performed in GPRS mode, the memory is used as "ring memory". In this case it might be possible, that not all of the acquired data are available in memory anymore.

➔8.6.8 GPRS, page 85

1. Select „Output“ from the monitoring menu with [⮝] and [⮟]
2. Confirm input with [RET]

```
Output monitoring
File: 3

25.04.2021  09:06:13
```

Fig. 8.87: Start data transfer on the PC

3. Select file number with [▲] und [▼]

The status line shows date and time of the measurement

4. Start data transfer with [RET]

```
Output monitoring

Please wait...
```

Fig. 8.88: Data transfer is running

Data transfer can be cancelled at any time by clicking [ESC]. After the transfer the program automatically switches back to the monitoring menu.

Data transfer to the PC: Data are transferred to the PC via the serial interface. To receive the data the program GEOTEST can be used or any other terminal program (e.g. WINDOWS Terminal or HyperTerminal).

8.6.8 GPRS

GPRS – **G**eneral **P**acket **R**adio **S**ervice – enables the **data transfer over the mobile phone network** (in this case GSM). In GPRS mode the data transfer is integrated into the measurement sequence and is carried out automatically. In addition the data will be stored in an internal ring buffer, because data transfer via mobile phone network is not assured at any time.

Modem You need an appropriate GPRS modem (available on request), which is connected to the instrument via the serial interface.

Memory To start a GPRS monitoring measurement free memory for about 30 data blocks is recommended (necessary is at least one data block). In case of transmission problems to the FTP server, the measurement data can then be buffered for an adequate time without loss of data.

Warning of data loss

If automatic data transfer is not possible, data are stored in an internal ring buffer. When the memory space is full and still no transmission is possible, the measurement won´t stop: the instrument overwrites measured data beginning with the first data block of the current measurement file. Data loss is possible!

→ Check GPRS connection periodically and restore connection if necessary.

If data transfer via GPRS after data acquisition is not possible, data blocks will be sent later, provided that they are still in the ring buffer and were not overwritten. Up to 50 data blocks can be sent later

Settings

To perform measurements in GPRS mode, **several settings for GPRS and FTP are to be made**. ➔8.10.2 Communication, page 96

Format of data transfer is the **monitoring standard format**.➔10.2.5 Monitoring, page 121

To check the GSM signal strength and the GPRS and FTP connection, **various test functions are integrated**. For analysis of potential problems any single step of the connection establishment will be displayed during the tests. In case of problems the single steps may last up to five minutes. ➔8.11 Misc, page 103

Menu items in GPRS mode ➔8.6.5 Run, page 80

A **list of error numbers** concerning the data transfer between instrument and FTP server you will find in the appendix. ➔10.3 Monitoring GPRS – error numbers, page 124

The two monitoring modes use the internal memory in different ways:

- In **standard monitoring mode** (without GPRS) data acquisition automatically ends as soon as the internal memory is full. **No data will be overwritten**.
- In **GPRS monitoring mode** the measurement data will be stored in an **internal ring buffer**. In case of transfer problems data are stored until the memory is full. The measurement will not stop, but **the instrument overwrites already measured data** beginning with the first data block of the current measurement file.

8.6.9 Monitoring measurement immediately after starting

In mode **Monitoring** a monitoring measurement is performed when the device is switched on.

To use the mode, do the following:

Preparation

1. Select Starting mode **Monitoring** under **Settings | Device | Startup**.
2. Select Parameter set, Parameter, File and Monitoring mode* under **MON | Run**.

3. Start the measurement with [RET].

→ After the measurement the device switches itself off.

If the device is "woken up" again (see Monitoring modes below), e.g. by

- pressing a key or
- applying an external voltage or
- receiving a character via the serial interface,

then a monitoring measurement with the selected parameter set and file is started automatically.

To return to the main menu after starting the device, hold down the [.] key when starting.

→ After the measurement, the data can be transferred to a PC using **MON | Output**

A measurement can be continued with MON | Continue.

→ Under **Settings | Device | Startup**, the monitoring mode can be deactivated by setting the main menu mode.

***Monitoring modes**

- **Standard**: Start time and interval is specified. First measurement is performed at the start time and repeated after the interval time. Data is stored on the device, maximum until the memory is full. The device is always switched on.
- **GPRS**: Start time and interval is specified. First measurement is performed at the start time and repeated after the interval time. Data is stored in an internal ring buffer. If the memory is full, the oldest measurements are overwritten. The device is always switched on.
- **Remote**: No start time and interval are specified. The device switches off after setting all parameters. If it is woken up via the serial interface, it performs a measurement. The measurement results are already output via the serial interface during the measurement and are not stored on the device. After the measurement, the device switches off again.
- **Power sync**: No start time and interval are specified. The device switches off after setting all parameters. If the device is connected to an external power supply, it wakes up and starts a measurement. The data is stored on the device, at most until the memory is full. The device switches off after the measurement and must be woken up again for the next measurement by applying an external voltage.
- **Serial sync**: No start time and interval are specified. The device switches off after setting all parameters. If the device is woken up via the serial interface, it starts a measurement. The data is stored on the device, at most until the memory is full. The device switches off after the measurement and must be woken up again for the next measurement via the serial interface.
- **RTC sync**: Start time and interval is specified. First measurement is performed at the start time and repeated after the interval time. Data is stored on the device, maximum until the memory is full. The device switches off after the measurement and is always switched on again automatically (via the integrated clock) for the next measurement.

Sequence für starting a measurement via the serial interface:

- An external Computer sends one, or more characters 'U' to the device via the serial interface until the device responds with a 'U'.

- The external computer must send within two seconds the string 'REMOTE' + CR (0x0D)

If this sequence is not observed, the device switches off again.

The **RTC sync** mode is only available on *4point light* devices from the year 2022.

8.7 Contact

The output voltage is a good indicator for the quality of the coupling of the current electrodes. “Contact” will give an estimation of the output voltage that is necessary to establish the preset constant output current at the AB-electrodes.

⚠ WARNING

Voltage at the electrodes A and B

Activation of the menu item “Contact” will switch ON the transmitter. Touching the electrodes A and B may result in an electric shock.

→ Do not touch energized electrodes A and B
→ Make sure that the instrument is not working before touching or relocating the electrodes.

```
VES MAP RMT TOM MON
CONTACT SP DELETE
SETTINGS MISC INFO
Battery:   5.52V
```

Fig. 8.89: Main menu

1. Select “CONTACT” from the main menu with [▲] and [▼]
2. Confirm selection with [RET]

```
Output Voltage
0.31 Hz 1.0mA
164.23V
164.23 kOhm   <ESC>
```

Fig. 8.90: Contact menu – continuous display of the transmitter voltage

Menu item	Function
Output Voltage:	Output voltage
0.31 Hz:	Output frequency (selectable)
1.0 mA	Output current (selectable)
164.23 V	Output voltage (displayed)
164.23 kOhm	Contact resistance

Tab. 8.64: Contact – menu items

Key assignment	Reaction
[1] / [7]	Select frequency
[▲] / [▼]	Select output current
[ESC]	Cancel

Tab. 8.65: Navigation through the contact menu

→ Select frequency with [1] and [7]
→ Select output current with [▲] and [▼]

Output voltage is displayed continuously

→ Cancel with [ESC]

8.8 SP

Self-potential measurement will determine the DC voltage between M and N. This is useful in case of non-polarizable electrodes at M and N.

```
VES MAP RMT TOM MON
CONTACT SP DELETE
SETTINGS MISC INFO
Battery:   5.52V
```

Fig. 8.91: Main menu

1. Select “SP” from the main menu with [▲] and [▼]
2. Confirm selection with [RET]

```
Self potential
SP
0.0344 V
<ESC> Exit
```

Fig. 8.92: Measured SP

The measured SP is displayed. Transmitter is OFF.

8.9 Delete

Under the menu item “Delete” **ALL saved data** of the instrument will be deleted.

Warning of data loss

If you confirm “Delete” with [🡐] ALL saved data of the instrument will be deleted irreversibly. You cannot undo this operation.

→ Transfer important data to the PC before using delete

```
VES MAP RMT TOM MON
CONTACT SP DELETE
SETTINGS MISC INFO
Battery:   5.52V
```

Fig. 8.93: Main menu

1. Select “DELETE” from the main menu with [⮝] and [⮟]
2. Confirm selection with [RET]

```
Delete all data?
<BS>  Delete
<ESc> Abort
```

Fig. 8.94: Delete

3. Delete data with [🡐]

All data of the instrument are deleted.

4. Exit the menu with [ESC]

8.10 Settings

Under the menu item “Settings” general settings can be adjusted.

```
VES MAP RMT TOM MON
CONTACT SP DELETE
SETTINGS MISC INFO
Battery:   5.52V
```

Fig. 8.95: Main menu

1. Select “SETTINGS” from the main menu by clicking [⮝] or [⮟]
2. Confirm selection with [RET]

```
SETTINGS
Device Communication
Service Acquisition
Save Load
```

Abb. 8.96: Settings menu

Menu item	Function
Device	Set date and time, loading parameters of internal batteries, LCD contrast and startup mode
Communication	Set parameters for data transfer (serial, GPRS, FTP, Provider)
Service	Adjust factory settings
Acquisition	Set parameters for data acquisition, select country specific frequencies
Save	Output of internal parameter via the serial interface
Load	Loading internal parameter via the serial interface

Tab. 8.66: Settings – menu items

3. Select “Device” from the settings menu by clicking [⮝] or [⮟]
4. Confirm selection with [RET]

8.10.1 Device

Under the menu item “Device Settings” date, time and loading parameters of the internal batteries are set, also the contrast of the LCD display and the startup mode. Furthermore the Tomography mode option “response to key stroke” can be activated or deactivated at this point.

```
  DEVICE SETTINGS
Clock Battery LCD
Startup  Tom. Wait
Switches
```

Fig.. 8.97: Device menu

Menu item	Function
Clock	Set current date and time
Battery	Set charging parameters of the batteries
LCD	Adjust the contrast of the LCD display
Startup	Set the startup mode
Tom. wait	Tomography mode: response to key stroke active/inactive
Switches	Select switches type (single electrode box or multiplexer)

Tab. 8.67: Device – menu items

1. Select “Device” from the menu by clicking [⮝] or [⮟]
2. Confirm selection with [RET]

Clock

```
Clock
16.10.2021 10:13:35
<RET> Set
<ESC> Cancel
```

Fig. 8.98: Set current date and time

Key assignment	Reaction
[0] … [9]	Input numerical values
[RET]	Confirm and save input
[ESC]	Cancel input, go back to the settings menu

Tab. 8.68: Navigating through the clock menu

1. Click [RET]
2. Select „Date“ or “time” by clicking [⮝] or [⮟]
3. Input numerical values using [0] ... [9]

Former values will be overwritten

4. Confirm input with [RET] or cancel input with [ESC]

Battery

Under the menu item “Battery” the quick charge mode can be activated or deactivated. You also set here the voltage difference “DeltaU“, this is the charge turn off voltage after battery voltage has peaked (quick charge will be stopped).

```
Battery parameter
DeltaU:10.0(5..50mV)
Quick charge: Enable
```

Fig. 8.99: Batteries – loading parameters

Menu item	Function
DeltaU	Set „DeltaU“
Quick charge: Enable	Activate/deactivate quick charge mode

Tab. 8.69: Battery menu items

1. Select menu item by clicking [⮝] or [⮟]
2. Set DeltaU with [🡐] and numerical keys
3. Activate/deactivate „Quick charge“ with [🡐]
4. Save changes and quit menu with [RET]

LCD

```
Set LCD-Contrast
Contrast = 1
```

Fig. 8.100: Adjust LCD contrast

1. Adjust contrast with [⮝] and [⮟]
2. Save changes and quit menu with [RET]

Startup

Under the menu item “Startup” you select the startup mode of the instrument ⓘ. This is the mode the instrument changes to after starting the instrument. Possible modes are “Main menu”, “Remote” and “Monitoring”.

```
Select startup mode
Main menu
```

Fig. 8.101: Startup mode after turning on the instrument

Startup mode	Function

Main menu	For normal operation – the instrument starts in the main menu. Only in this mode the instrument turns off automatically.
Remote	If the instrument is used in remote mode and controlled by a computer via the serial interface. Advantageous especially when no immediate access to the instrument is possible.
Monitoring	For stand-alone monitoring applications. Advantageous especially when no immediate access to the instrument is possible.

Tab. 8.70: Startup menu items

1. Select startup mode with [🡐]
2. Save changes and quit menu with [RET]

The instrument has **different startup modes**:

- regularly by clicking [RET]
- by a signal via the serial interface
- application of an external power source
- after an internal reset due to a program instability

In case the instrument is accidentally switched on by clicking [RET], **it only switches off automatically if the startup mode "Main menu" is selected!**

If the [.] key is pressed at the same time as the device is started, the main menu is accessed directly, regardless of the settings made under **Settings|Device|Startup**.

Tom. wait

```
Tomography
Wait for Key: no
```

Fig.. 8.102: Tomography mode: activate/deactivate "response to keystroke"

1. Select YES or NO with [🡐]
2. Save changes and quit menu with [RET]

Switches

```
Select switches type
Single channel
```

Fig.. 8.103: Selection of the

1. Select Single channel (= single electrode box) or Multi channel (= multiplexer) with [🡐] to be checked!
2. Save changes and quit menu with [RET]

8.10.2 Communication

Under the menu item “Communication” the parameters for data transfer can be set. Under “GPRS” and “FTP” it might be necessary to enter alphanumerical strings via the keypad.

➔ 7.3 Use of keypad, page 26

```
COMMUNICATION SET.
Serial
GPRS   FTP   Provider
```

Fig. 8.104: Communication menu

Menu item	Function
Serial	Set parameters for data transfer via the serial interface
GPRS	Set parameters for data transfer via GPRS
FTP	Enter access data for the FTP server
Provider	Enter provider ID

Tab. 8.71: Communication – menu items

1. Select menu item by clicking [⮝] or [⮟]
2. Confirm selection with [RET]

Serial

Under the menu item “Serial” the output parameters for data transfer via the serial interface are set.

```
Output Parameter
Dataformat: ASCII
ASCII: Point TAB.
Baud rate: 19200
```

Fig. 8.105: Output parameters for data transfer via serial interface

Menu item	Function
Data format:: ASCII	Select data format: ASCII or BINARY

ASCII: Point TAB.	Select ASCII format for numerical output and separators ⓘ
Baud rate: 19200	Set baud rate to PC

Tab. 8.72: Serial – menu items

Key assignment	Reaction
[▲]/[▼]	Select desired parameter
[🡐]	Select corresponding parameter value
[ESC]	Back to the settings menu, changes are not saved
[RET]	Back to the settings menu, changes are saved

Tab. 8.73: Navigation through the serial menu

1. Select menu item by clicking [▲] or [▼]
2. Select parameter value with [🡐]
3. Confirm selection with [RET]

ⓘ For **numerical output t**he ASCII format can be point or comma. **Separators** are “TAB” or “Space”.

GPRS Under the menu item “GPRS” the parameters for data transfer via GPRS are set.

```
   GPRS SETTINGS
PIN
Context
```

Abb. 8.106: GPRS menu

Menu item	Function
PIN	Enter PIN of SIM card
Context	Enter context depending on the provider (refer to Tab. 8.75)

Tab. 8.74: GPRS – menu items

Provider	Country	Context
O2	Germany	internet
T-Mobile	Germany	internet.t-mobile
Vodafone	Germany	wap.vodafone.de

Tab. 8.75: Context for several mobile phone network providers

1. Select menu item by clicking [▲] or [▼]
2. Enter PIN and context by using the alphanumerical keys
3. Confirm selection with [RET]

FTP Under the menu item “FTP” the access data for the FTP server are set.

```
   FTP SETTINGS
Server Folder
Login Password
Mode
```

Abb. 8.107: FTP menu

Menu item	Function
Server	Select the TCP address, it must have the format „xxx.xxx.xxx.xxx“ (z. B.: „129.128.027.111“]
Folder	Select the data storage folder on the FTP server
Login	Ender login name (40 characters)
Password	Enter password for access to the server
Mode	Select transfer mode (active/passive) ⓘ

Tab. 8.76: FTP – menu items

1. Select menu item by clicking [▲] or [▼]
2. Confirm selection with [RET]
3. Enter strings by using the alphanumerical keys
4. Confirm input with [RET]
5. Select transfer mode with [←]
6. Confirm selection with [RET]

ⓘ The folder must already exist on the server. The instrument cannot create this folder.

The mode of data transfer depends on your FTP server.

Provider Under the menu item “Provider” the provider ID is entered. By default no provider is selected (0). In this case – if the signal of the provider is weak – it is possible, that the modem chooses a roaming partner.

Stop of data transfer

If the provider signal is weak and no provider was selected in advance, the modem temporarily may choose a roaming partner for whom the current GPRS parameter “Context” is not valid: In this case no data transfer is possible anymore.

→ If measurements nearby a national border are to be performed, **essentially select an individual provider**!

To **select an individual provider**, proceed as follows:

1. Switch to the menu item „Misc“ „Provider“ and request a valid provider list
   ➔ 8.11.1 Provider, pages 104
2. Switch to „Settings“ „Communication“ „Provider“
3. Enter the provider ID of the desired mobile operator by using the numerical keys ⓘ

```
 Provider ID:
26207
```

Fig. 8.108: Enter provider ID

4. Confirm input with [RET]

By default, no provider is selected (Provider ID: 0). In this case **the instrument automatically chooses the strongest available access point.**

8.10.3 Service

Under the menu item “Service” the factory settings can be adjusted. A code number is required for access.

8.10.4 Acquisition

Under the menu item “Acquisition” multiple parameters for data acquisition can be set and country specific frequencies can be selected.

! NOTICE

Noise signal at 10 Hz measurement frequency

In Europe or other countries with 50 Hz mains frequency measurements at 10 Hz result in strong interference signals. These signals interfere with the measurement.

→ Never use 10 Hz in Europe or in any other countries with 50 Hz mains frequency.

Measurement errors

“Delay” denotes the time the instrument is waiting between switching on its receiver and starting data acquisition. Delay time must be at least 0.2 sec. If the time is set below 0.2 sec serious measurement errors can result..

→ Do not set delay time below 0.2 sec

→ If not experienced do not change the default settings.

Acquisition Parameters

```
Acquisition parameter
Delay [s]: 0.50
Geometry: P/DEK: 6
Mains Freq. 50 Hz
```

Fig. 8.109: Acquisition menu

Prüfen!

Menu item	Function
Delay	Delay time between switching on the instrument and measurement
Geometry: P/DEK	P/DEK (Points per decade) P/DEK is the number of values for L/2 in AutoL mode ➔ 8.2 VES mode, page 30
Mains Freq.	Select mains frequency. Possible values are 50 Hz (Europe) or 60 Hz (USA). This selection is essentially a preselection of the frequencies which are available in remote mode. The frequencies will be used in AutoF mode. ➔ 8.4 Remote mode, page 60

Tab. 8.77: Acquisition parameter– menu items

P/DEK	Values
12	1 – 1.2 – 1.5 – 1.8 – 2.2 – 2.7 – 3.3 – 3.9 – 4.75 – 5.6 – 6.8 – 8.2 – 10
10	1 – 1.25 – 1.60 – 2 – 2.5 – 3.2 – 4 – 5 – 6.3 – 8 – 10

6	1 – 1.5 – 2.2 – 3.2 – 4.6 – 6.8 – 10

Tab. 8.78: Values of P/DEK (L/2)

Selection	Frequencies [Hz] ⓘ
60 Hz	0.31, 0.62, 1.25, 2.5, 5.0, 10.0, 15, 30
50 Hz	0,26, 0,52, 1.04, 2.08, 4.16, 8.33, 12.5, 25

Tab. 8.79: Mains frequency – related frequencies

1. Select menu item by clicking [⮝] or [⮟]
2. Select delay and geometry values with [🡐]

Never set the delay time below 0.2 sec as serious measurement errors may result.

3. Select “50 Hz” or “60 Hz” with [🡐]
4. Confirm selection with [RET]

ⓘ Mains noise only will be sufficiently suppressed if it is an odd multiple of the measurement frequency. So do not use 10 Hz in a 50 Hz mains environment!

8.10.5 Save

Under the menu item “Save” internal parameters are transferred to the PC via the serial interface.

```
SAVE PARAMETER
Calibration
Settings
Dump
```

Fig. 8.110: Save menu

Menu item	Function
Calibration	Save calibration values
Settings	Save internal parameters
Dump	Save a complete memory dump, just for internal purposes

Tab. 8.80: Save – menu items

1. Select menu item by clicking [⮝] or [⮟]
2. Confirm selection with [RET]

The transfer of the calibration values and the settings is very fast. The transfer of a dump can last several minutes. In this case the transfer status is displayed.

```
Send memory dump
Take some minutes
Written: 89076
Dump
```

Fig. 8.111: Dump mode – transfer status

8.10.6 Load

Under the menu item “Load” internal parameters will be loaded via the serial interface..

```
RECEIVE PARAMETER
Calibration
Settings
```

Fig. 8.112: Load menu

1. Select menu item by clicking [▲] or [▼]
2. Confirm selection with [RET]

Parameters are loaded to the instrument

8.11 Misc

Under the menu item “MISC” test functions for GSM, GPRS and FTP can be found as well as the calibration mode of the instrument and the error protocol.

```
VES MAP RMT TOM MON
CONTACT SP DELETE
SETTINGS MISC INFO
Battery:   5.52V
```

Abb. 8.113: Main menu

1. Select „MISC“ in the main menu with [↑] or [↓]
2. Confirm selection with [RET]

```
MISCELLANEOUS
GSM Signal Test GPRS
Test FTP   Provider
Calibration Protocol
```

Fig. 8.114: Miscellaneous menu

Menu item	Function
GSM signal ⓘ	Shows the current signal strength of the mobile network. Helpful to position a directional antenna towards the mobile network base station. The signal strength will be updated every five seconds.
Test GPRS ⓘ	Connection to the GSM net will be established and the GPRS mode will be activated. If no modem is connected or the connected modem does not respond, GPRS test functions can be aborted by clicking [ESC].
Test FTP ⓘ	Connection to the server will be established and a small text file will be transferred.
Provider	Retrieval of a local provider list and the corresponding provider ID´s.
Calibration	Calibration of the instrument
Protocol	The instrument sends an error protocol via the serial interface to the PC.

Tab. 8.81: Miscellaneous – menu items

3. Select menu item by clicking [▲] or [▼]
4. Confirm selection with [RET]

ⓘ Error numbers concerning the data transfer between the instrument and the FTP-Server are listed in the appendix.

➔ 10.3 Monitoring GPRS – error numbers, page 124

8.11.1 Provider

Under the menu item "Provider" **a list of the valid local mobile providers and their ID´s** can be retrieved. This option is important in case of measurements nearby the national border where international roaming may occur. By default, no provider is selected and roaming is possible.

Stop of data transfer

If the provider signal is weak and no provider was selected in advance, it might be, that the modem temporarily chooses a roaming partner for whom the current GPRS parameter “Context” is not valid: In this case no data transfer is possible anymore.

→ If measurements nearby a national border are to be performed, essentially select a provider!

Before selecting a particular provider, it´s status has to be checked. If the provider is available the corresponding ID has to be entered in the menu “Settings” “Communication” “Provider”

➔ 8.10.2 Communication, page 96

```
PROVIDER LIST
Please wait…
Can take one minute
```

Fig. 8.115: Provider list request

The provider list will be recalled automatically and displayed:

```
PROVIDER LIST
1,"T-Mobile D",,"26201";
1,"VodafoneD2",,"26202";
1,"EPlus",,"26203";2,"o2
- DE",,"26207";
```

Fig.. 8.116: Provider list

The display shows the **provider name**, the **provider ID** and the **current status**. Individual data are separated by commas, individual datasets (providers) by semicolons.

Status (0-3)	Provider name	Provider ID
1	"T-Mobile D"	„26201“
1	"Vodafone D2“	„26202“
1	"E-Plus"	„26203“
2	"o2 - DE"	„26207“

Tab. 8.82: Structure of the provider list

Number	Status
0	unknown
1	available
2	current
3	forbidden

Tab. 8.83: Status

1. Navigation through the list with [▲] and [▼]
2. Exit the list with [RET] or [ESC] and switch to the settings menu to enter the provider ID´s and select an individual provider.

➔ 8.10.2 Communication, page 96

8.11.2 Calibration

The **most important factors** affecting the **accuracy** of the instrument are:

- the **offset voltage** and
- the **internal phase shift** between current and voltage.

For the **accurate determination of these parameters** the instrument has a **calibration mode.** The **determined values are used for the correction** of the actually measured voltages.

Offset voltage is the voltage which the instrument measures if M and N are shorted. An ideal instrument then should read exactly 0. By intentionally shorting M and N the instrument can determine the offset voltage and subtract this voltage for all subsequent measures.

There are **two possibilities of calibration**:

- Offset calibration
- Full calibration

If "Full calibration" is selected, the complete receiver transfer function will be calibrated by using an internal 11 Ohms resistor. The instrument will determine gain, phase shift and offset using this resistor as reference.

- To achieve **full accuracy** calibrate the instrument **regularly**! Usually an **offset calibration** should be sufficient. The necessary corrections after a new calibration are usually only a fraction of a microvolt for the voltage and a fraction of mrad for the phase shift.
- **Before** any **calibration** make sure that all **external cables are disconnected**.
- Additional resistors are not necessary. The instrument has an **11 Ohms build-in reference resistor** that will automatically be switched into the signal circuits in calibration mode.
- Repeatedly performing a **full calibration** is recommended **for high resolution IP measurements.**

```
CALIBRATION
Offset calibration
Full calibration
Reset calibration
```

Fig. 8.117: Miscellaneous – Calibration

1. Select calibration mode with [⮝] and [⮟]
2. Confirm selection with [RET]

8.11.2.1 Offset Calibration

```
OFFSET CALIBRATION
Frequency: 1.25 Hz
Averages: 16(8..128)
```

Fig. 8.118: Frequency and number of averages

Menu item	Function
Frequency: 1.25 Hz	Frequency: 0.26 – 30 Hz/ALL ⓘ
Averages: 16 (8 … 128)	Number of averages

Tab. 8.84: Offset calibration menu

Key assignment	Reaction
[1] / [7]	Select frequency/frequencies
[▲] / [▼]	Select number of averages
[ESC]	Cancel
[RET]	Confirm input, save values

Tab. 8.85: Navigation through offset calibration

1. Select frequency with [1] and [7]
2. Select number of averages with [▲] and [▼]
3. Save values and start calibration with [RET]

Offset calibration starts:

```
OFFSET:        4.16 Hz
I: 0 mA        Avg 51
U0   +123.1uV    0.04%
U90 - 5.23 uV    0.02%
```

Fig. 8.119: Display of offset voltages during calibration

Menu item	Function
4.16 Hz	Frequency
I: 0 mA	Current, 0 mA means transmitter „off“
Avg 51	Number of averages
U0 +123.1 µV	averaged offset value U0 ⓘ
0.04 %	Typical error in %
U90 -5.23 µV	averaged offset value U90 ⓘ
0.02 %	Typical error in %

Tab. 8.86: Offset calibration menu

Key assignment	Reaction
[ESC]	Cancel
[RET]	End, display and save values

Tab. 8.87: Navigation during offset measurement

4. Wait until end of offset calibration

Measured offset voltages are displayed:

```
OFFSET:Ready   4.16Hz
I:  0 mA       Avg 51
U0   +123.1uV    0.4%
U90  -  5.23uV   0.2%
```

Abb. 8.120: Display of measured offset voltages

Key assignment	Reaction
[ESC]	Cancel, delete measured values
[RET]	End, save values

Tab. 8.88: Navigation after offset calibration

5. Save calibration values with [RET] or cancel calibration with [ESC]

ALL: Automatic calibration of all frequencies. If operating the instrument at one frequency only, select only this frequency!

Voltages displayed here during calibration do not correspond to real input voltages but are the voltages at the input of the internal analog-to-digital converter. Input voltages are amplified by a factor of 5 to 10 before reaching the ADC.

8.11.2.2 Full Calibration

Full calibration determines the **complex frequency response of the instrument**. For this purpose **a precision resistor with 11 ohms** is internally connected between A and B / M and N. Using a current of 5 mA offset, gain and phase shift of the instrument are determined at all or at selected frequencies.

All voltages determined in the “Full Calibration” mode are used to calculate the factors for the correction of the data.

Meter damage in case of changing the reference resistor

In the instrument a reference resistor of 11 Ohms is integrated. Under “Full Calibration” the value of the reference resistor can be changed. This change of the resistor value may lead to instrument damage or total loss during calibration.

→ Do not change the value of the reference resistor!

```
FULL CALIBRATION

REFERENCE RESISTOR
VALUE: 11.00
```

Fig. 8.121: Value of reference resistor

Key assignment	Reaction
[🡐]	Delete character
[ESC]	Cancel
[RET]	Continue

Tab. 8.89: Navigation „Full Calibration“

1. Delete characters with [🡐]
2. Change values by using the numerical keys
3. Continue with [RET]

```
FULL CALIBRATION
Frequency: 1.25 Hz
Averages: 16(8..128)
```

Fig. 8.122: Select frequency and averages

Key assignment	Reaction
[1] / [7]	Select frequency from 0.26 – 30 Hz or ALL ⓘ
[⮝] / [⮟]	Select number of averages
[RET]	Continue

Tab. 8.90: Navigation “Full Calibration”

4. Select frequency with [1] and [7]
5. Select number of averages with [⮝] and [⮟]
6. Continue with [RET]

ⓘ **ALL**: Automatic calibration of all frequencies

```
OFFSET:        4.16Hz
I: 0 mA         Avg 1
U0   +123.1 uV    5.6%
U90 - 5.23 uV     32%
```

Fig. 8.123: Display of offset voltages during calibration

Menu item	Function
4.16 Hz	Frequency
I: 0 mA	Current, 0 mA means: transmitter „off“
Avg 51	Number of averages
U0 +123.1 µV	Averaged offset value U0
5.6 %	Typical error in %
U90 -5.23 µV	Averaged offset value U90
32 %	Typical error in %

Tab. 8.91: Offset calibration menu

Key assignment	Reaction
[ESC]	Cancel
[RET]	End, display and save values

Tab. 8.92: Navigation during „offset calibration“

7. Wait until end of offset calibration

Measured offset voltages are displayed:

```
OFFSET: Ready 4.16Hz
I: 0 mA
U0   +123.1 uV    5.6%
U90 - 5.23 uV     32%
```

Fig. 8.124: Display of measured offset voltages

8. Save calibration values with [RET] or cancel calibration with [ESC]

```
GAIN:          4.16Hz
I:  5mA         Avg  1
U0   261.06mV     0.1%
U90   5.23mV     0.2%
```

Fig. 8.125: Gain calibration

Menu item	Function
4.16 Hz	Frequency
I: 5 mA	Output current
Avg 1	Number of averages
U0 +261,06 µV	Averaged voltage U0
0.1 %	Typical error in %
U90 -5.23 µV	Averaged voltage U90
0.2 %	Typical error in %

Tab. 8.93: Gain calibration – menu items

Key assignment	Reaction
[ESC]	Cancel
[RET]	Continue, save values

Tab. 8.94: Navigation during gain calibration

9. Wait until end of gain calibration

Averaged voltage U0 and averaged voltage U90 are displayed:

```
GAIN:  Ready    4.16Hz
I:  5mA        11.00  Ohm
U0    261.06mV    0.1%
U90   5.23  mV    0.2%
```

Fig. 8.126: Display of gain calibration results

10. End of calibration, save measurement values with [RET]

8.11.2.3 Reset Calibration

```
RESET CALIBRATION
<RET>  Okay
<ESC> Abort
```

Fig. 8.127: Reset calibration

1. Reset Calibration confirm with [RET]

Calibration values are reset: gain to 1.0, offsets to 0.0.

9 Troubleshooting

9.1 General error messages

General error messages which may occur while using the instrument

Error	Cause	Troubleshooting
The instrument does not respond any more	System crash	→ Interrupt external power supply → Remove batteries and insert them again → Restart the instrument
Warning signal during measurement	Loose contact of the electrodes A and B	→ Reduce current → Check connections/cables to the electrodes A and B
Measurement values are instable	Loose contact of the electrodes M and N	→ Check connections/cables to the electrodes M and N
Measurement values are not plausible	Inductive effects	→ Keep live cable reels away from the voltage electrodes M and N → Use well insulated cables, e.g. with silicone rubber, PTFE or hard PVC

9.2 Error messages in remote mode

In the remote mode the following error messages may occur on the PC:

Error	Cause	Troubleshooting
ovld	Overload condition at the AD-Converter	→ The instrument tries again to perform a valid measurement after 50 msec.
open	Output (current) circuit is open or maximum transmitter voltage is to low	→ The instrument tries again to perform a valid measurement after 50 msec.
l	External voltage is below threshold	→ If internal batteries are installed, the power supply of the instrument is sufficient. Measurements can be performed. → If no batteries are installed, measurements cannot be performed.
k	Internal and external voltage below threshold	→ Connect an external power supply
j	Output current does not meet the defined target	→ Reduce output current

A list of monitoring GPRS error numbers is supplied in the appendix

➔ 10.3 Monitoring GPRS – error numbers, page 124

10 Appendix

10.1 Mathematics

10.1.1 Electrode configuration

Geometry factors and calculation methods for the various electrode configurations:

Methods	Input	Formula
Schlumberger	A/2, L/2	$\rho = \pi * \frac{\left(\frac{L}{2}\right)^2 - \left(\frac{A}{2}\right)^2}{A} * \frac{U}{I}$
Half-Schlumberger	A/2, L/2	$\rho = 2\pi * \frac{\left(\frac{L}{2}\right)^2 - \left(\frac{A}{2}\right)^2}{A} * \frac{U}{I}$
Wenner	A	$\rho = 2\pi * A * \frac{U}{I}$
Dipole-Dipole	L, A L: dipole distance A: distance of electrodes	$n = \frac{L}{A}$ $\rho = \pi * n(n+1)(n+2)A * \frac{U}{I}$
Pole-Pole	A	$\rho = 2\pi * A * \frac{U}{I}$

Tab. 10.1: geometry factors and calculation methods

10.1.2 Phase definition

$$\varphi = \frac{U90}{U0} * 1000$$

Phase in mrad

10.1.3 Voltage correction

The voltage correction is mainly for internal documentation. For each frequency the following values are saved: Offset U0, Offset U90, A, B

Definition of A and B (measurement current = 5 mA):

$$A = \frac{\frac{U_{0,ref} - U_{0,Off}}{I}}{R_{Ref}} * k(I = 5mA) \qquad B = \frac{\frac{U_{90,ref} - U_{90,Off}}{I}}{R_{Ref}} * k(I = 5mA)$$

$U_{0,ref}$ = voltage at ADC with reference resistor, transmitter ON

$U_{90,ref}$ = voltage at ADC with reference resistor, transmitter ON

$U_{0,Off}$ = voltage at ADC with reference resistor, transmitter OFF

$U_{90,Off}$ = voltage at ADC with reference resistor, transmitter OFF

The voltages will be corrected according to the following equations:

$$U_{Korr} = \frac{(U_0 - U_{0,Off}) + i(U_{90} - U_{90,Off})}{A + iB}$$

$$= \frac{(U_0 - U_{0,Off}) * A + (U_{90} - U_{90,Off})B + i[(U_{90} - U_{90,Off})A - (U_0 - U_{0,Off})B]}{A^2 + B^2}$$

U_0, U_{90} = voltage at ADC

The following voltages will be displayed and saved:

$$U_{0,Korr} = \frac{(U_0 - U_{0,Off}) * A + (U_{90} - U_{90,Off}) * B}{A^2 + B^2} * k(I)$$

$$U_{90,Korr} = \frac{(U_{90} - U_{90,Off}) * A - (U_0 - U_{0,Off}) * B}{A^2 + B^2} * k(I)$$

10.1.4 Error definition

Calculation of standard deviation:

$$\sigma^2 = \frac{1}{N-1}\left[\sum_{i=0}^{N-1} x_i^2 - \frac{1}{N}\left(\sum_{i=0}^{N-1} x_i\right)^2\right]$$

Typical error percentage:

$$\frac{\sigma}{\sqrt{N} * x_{Avg}} * 100$$

Error resistivity = error (U0) in %

Error phase: $\frac{\Delta U90}{U0} * 1000$ [mrad] where $\Delta U90 = \frac{\sigma(U90)}{\sqrt{N}}$.

10.2 Data formats

10.2.1 VES

Data	Comment
SCHLUMBERGER	* type of measurement
V 4.00 20.10.2021	* Software version/data
0	* file number
03.11.2021 21:25:09	* date/time of file creation
0.100 0.200 22.140 0.017 5.0000 0.0 0.0 5.0000	* VES - record (➔ Tab. 10.3)
0.100 0.200 38.377 0.026 5.0000 0.0 0.1 8.3300	
0.100 0.200 38.377 0.105 1.0000 0.0 0.1 8.3300	
0.100 0.200 38.372 0.128 0.1000 0.0 0.0 8.3300	

Tab. 10.2: VES – results file

VES data	Comment
0.100	A/2 (m)
0.200	L/2 (m)
22.140	rho (Ohm*m)
0.017	phi (mrad)
5.0000	I (mA)
0.0	error rhos (%)
0.0	error phi (mrad)
5.0000	* frequency (Hz)

Tab. 10.3: VES record – examples and comment

10.2.2 Mapping

Data	Comment
MAPPING	* type of measurement
V 4.00 20.10.2021	* Software version/data
4	* file number
03.11.2021 21:25:09	* date/time of file creation
1.00000 0.50000 50000 5 3 2.08	* geometry data (➔ Tab. 10.5)
0 2 81.44917 0.00291 1.0000 0.000 3.700	* mapping - record (➔ Tab. 10.6)
1 0 81.44813 0.00072 1.0000 0.000 6.600	
1 1 81.44718 0.00294 1.0000 0.000 2.200	
1 2 81.44825 0.00334 1.0000 0.000 2.300	
2 0 81.44618 0.00274 1.0000 0.000 0.700	
2 1 81.44758 0.00316 1.0000 0.000 2.300	
2 2 81.44776 0.00279 1.0000 0.000 2.300	
3 0 81.44760 0.00354 1.0000 0.000 1.000	
3 1 81.44725 0.00341 1.0000 0.000 1.300	
3 2 81.44818 0.00353 1.0000 0.000 0.200	
4 0 81.44738 0.00307 1.0000 0.000 0.700	
4 1 81.44757 0.00261 1.0000 0.000 2.900	

Tab. 10.4: Mapping – results file

Geometry data	Comment
1.00000	distance of grid points dX (m)
0.50000	distance of grid points dY (m)
50000	electrode geometry L (m)
5	number of grid points Xmax
3	number of grid points Ymax
2.08	* frequency (Hz)

Tab. 10.5: Geometry data – examples and comment

Mapping record	Comment
0	Index X
0	Index Y
81.44609	U0 (mV)
0.03295	U90 (mV)
1.0000	I (mA)
0.000	error U0 (%)
1.700	error U90 (%)

Tab. 10.6: Mapping record – examples and comment

10.2.3 Multimapping

Dat	Comment
MULTIMAPPING	* *type of measurement
V 4.86 20.10.2021	* Software version/data
4	* file number
03.11.2021 21:25:09	* date/time of file creation
1.00000 0.50000 50000 5 3 2.08	* geometry data (➔ Tab. 10.8)
1 2 3 4 2 3 4 5 3 4 5 6	* electrode configurations
	* Multimapping - record (➔ Tab. 10.9)

0 0 1,000 18,03707 0,00083 0,0 39,0 18,03635 -0,00268 0,0 50,0 18,03753 0,00027 0,0 255,0

0 1 7,000 70,60034 0,01135 0,0 46,0 70,59625 0,00858 0,0 183,0 70,60205 0,01310 0,0 123,0

Tab. 10.7: Multimapping – results file

Geometry data	Comment
0,50000	distance of grid points dX (m)
1,00000	distance of grid points dY (m)
1,00000	electrode geometry L (m)
4	number of grid points Xmax
4	number of grid points Ymax
8,33	* frequency (Hz)

Tab. 10.8: Geometry data – examples and comment

Mapping record	Comment
0	Index X
0	Index Y
1.0000	I (mA)
18,03707	U0 (mV)
0,00083	U90 (mV)
0,0	error U0 (%)
39,0	error U90 (%)
18,03635	U0 (mV)
-0,00268	U90 (mV)
0,0	error U0 (%)
50,0	error U90 (%)
18,03753	U0 (mV)
0,00027	U90 (mV)
0,0	error U0 (%)
255,0	error U90 (%)

Tab. 10.9: Multimapping data block – examples and comment

U0, U90, error U0, error U90 will be repeated for each electrode configuration.

10.2.4 Tomography

Parameter set

Data	Comment
S	* Start
Test data	* comment
1	* frequency code (➔ Tab. 10.11)
0.123	* min. voltage [mV]
99	* max. number of averages [0…99]
3.5	* error limit [%]
0	* type of measurement (➔ Tab. 10.11)
1.000	* electrode separation [m]
0.000	* profile position of first electrode [m]
1 12	* first and last electrode used
1 20 1 21 40 1 51 75 0	* ActEle addresses used
1 2 4 3	* electrode configurations
2 3 5 4	* electrode configurations
3 4 6 5	* electrode configurations
4 5 7 6	* electrode configurations
...	
E	* end

Tab. 10.10: Tomography – parameter set

Code	Frequency [Hz]
0	0.26
1	0.52
2	1.04
3	2.08
4	4.16
5	8.33
6	12.5
7	25.0
8	0.31
9	0.62
10	1.25
11	2.5
12	5.0
13	10.0
14	15.0
15	30.0

Tomography - frequency code

Code	Type of measurement
1	Schlumberger
2	Pole Dipole
3	Wenner
4	Dipole-Dipole
5	Pole-Pole

Tomography- type of measurement

Tab. 10.11: Tomography – frequency code and type of measurement

Results file

Data	Comment
S	* Start
V 4.86 10.07.2019	* Software version/date
1	* file number
Tomography_Demo	* comment
17.07.2009 17:54:10	* date/time of file creation
8.3300	Frequency [Hz]
10.0000	* min. voltage [mV]
20	* max. number of averages [0…99]
0.2000	* error limit [%]
4	* type of measurement
0.5000	* electrode separation [m]
0.0000	* profile position of first electrode [m]
1 60	* first and last electrode used
1 20 1 41 60 1 61 80 0 76 100 0 101 125 0	* ActEle addresses used
1 2 4 3 46.30558 -0.01825 0.100 0.0 4	* Tomography - record
2 3 5 4 46.31873 0.00080 0.100 0.0 35	* Tomography - record
3 4 6 5 46.31486 -0.00457 0.100 0.0 29	* Tomography - record
4 5 7 6 46.31747 -0.00304 0.100 0.0 30	* Tomography - record
...	(➔ Tab. 10.13)
...	
...	
E	* end

Tab. 10.12: Tomography – results file with parameters and measured data

Dat	Comment
1	electrode A
2	electrode B
4	electrode M
3	electrode N
46.30558	U0 [mV]
-0.01825	U90 [mV]
0.100	I [mA]

Tab. 10.13: Tomography record – examples and comment

10.2.5 Monitoring

Parameter set

Dat	Comment
S	* Start
Test data	* comment
1	* frequency (➔ Tab. 10.15)
0.123	* min. voltage [mV]
99	* max. number of averages [0…99]
3.5	* error limit [%]
0	* type of measurement (➔ Tab. 10.15)
1.000	* electrode separation [m]
0.000	* profile position of first electrode [m]
1 12	* first and last electrode used
1 20 1 21 40 1 51 75 0	* ActEle addresses used
1 2 4 3	* electrode configurations (A B M N)
2 3 5 4	* electrode configurations
3 4 6 5	* electrode configurations
4 5 7 6	* electrode configurations
...	
E	* end

MTab. 10.14: Monitoring parameter set

Code	Frequency [Hz]
0	0.26
1	0.52
2	1.04
3	2.08
4	4.16
5	8.33
6	12.5
7	25.0
8	0.31
9	0.62
10	1.25
11	2.5
12	5.0
13	10.0
14	15.0
15	30.0

Monitoring – frequency code

Code	Type of measurement
1	Schlumberger
2	Pole Dipole
3	Wenner
4	Dipole-Dipole
5	Pole-Pole

Monitoring – type of measurement

Tab. 10.15: Monitoring – frequency code and type of measurement

Results file

Data	Comment
S	* Start
V 4.86 10.07.2019	* Software version/date
1	* file number
test	* comment
17.07.2019 17:54:10	* date/time of file creation
4.1600	* frequency (Hz)
10.0000	* min. voltage [mV]
8	* max. number of averages [0…99]
0.2000	* error limit [%]
3	* type of measurement
1.0000	* electrode separation [m]
0.0000	* profile position of first electrode [m]
1 10	* first and last electrode used
1 20 1 21 40 1 41 60 1 61 80 1 81 100 1	* ActEle addresses used
00:01:00	* measurement interval (hh:mm:ss)
9	* number of electrode configurations
1 4 2 3	* electrode configurations (A B M N)
2 5 3 4	
3 6 4 5	
4 7 5 6	
5 8 6 7	
6 9 7 8	
7 10 8 9	
1 7 3 5	
2 8 4 6	
18.07.2019 15:04:00	
0.00	
11.75	* measurement 1 date/time
47.15061 -0.01649 1.000 0.0 31 0	* temperature
47.15784 0.00751 1.000 0.0 47 0	* external power supply (V)
47.13835 0.01010 1.000 0.0 12 0	* monitoring data – measurement 1 (➔ Tab. 10.17)
47.13544 -0.00361 1.000 0.0 37 0	
47.14953 -0.00673 1.000 0.0 51 0	
47.16218 0.00926 1.000 0.0 31 0	
47.13479 0.00776 1.000 0.0 0 0	
47.13894 -0.00445 1.000 0.0 36 0	
47.15719 0.00090 1.000 0.0 53 0	
47.14702 0.01243 1.000 0.0 16 0	
47.13527 0.00335 1.000 0.0 5 0	
18.07.2019 15:05:00	
0.00	
11.75	* end of data block 1
43.85556 -4.85715 1.000 7.0 28 0	* measurement 2 date/time
47.14279 0.01488 1.000 0.0 1 0	* temperature
47.13377 0.00375 1.000 0.0 35 0	* external power supply (V)
47.14318 -0.00485 1.000 0.0 16 0	* monitoring data – measurement 2
47.15565 0.00413 1.000 0.0 78 0	
47.14148 0.01154 1.000 0.0 6 0	
47.13541 -0.00034 1.000 0.0 137 0	
47.14694 -0.00804 1.000 0.0 43 0	
47.17075 0.00426 1.000 0.0 117 0	
18.07.2019 15:06:00	
0.00	
11.75	* end of data block 2
47.14586 -0.00481 1.000 0.0 27 0	* measurement 3 date/time

```
47.14242 0.01214 1.000 0.0 3 0                  * temperature
47.13429 -0.00044 1.000 0.0 68 0                * external power supply (V)
47.14519 -0.00742 1.000 0.0 18 0                * monitoring data - measurement 3
47.17065 0.00400 1.000 0.0 80 0
47.14580 0.01583 1.000 0.0 3 0
47.13476 0.00517 1.000 0.0 8 0
47.14173 -0.00491 1.000 0.0 46 0
47.15752 0.00194 1.000 0.0 161 0
E

                                                * end of data block 3
                                                * end
```

Tab. 10.16: Monitoring– results file with parameters and measured data

Dat	Comment
47.15061	U0 (mV)
-0.01649	U90 (mV)
1.000	I (mA)
0.0	error U0 (%)
31	Error U90 (%)
0	transmitter voltage (V)
47.15061	U0 (mV)

Tab. 10.17: Monitoring record – examples and comment

These data are listed for each electrode configuration

10.3 Monitoring GPRS – error numbers

Error Number	Description
General errors	
0	phone failure
1	no connection to phone
2	phone-adaptor link reserved
3	operation not allowed
4	operation not supported
5	PH-SIM PIN required
10	SIM not inserted
11	SIM PIN required
12	SIM PUK required
13	SIM failure
14	SIM busy
15	SIM wrong
16	incorrect password
17	SIM PIN2 required
18	SIM PUK2 required
20	memory full
21	invalid index
22	not found
23	memory failure
24	text string too long
25	invalid characters in text string
26	dial string too long
27	invalid characters in dial string
30	no network service
31	network time-out
32	network not allowed - emergency calls only
40	network personalization PIN required
41	network personalization PUK required
42	network subset personalization PIN required
43	network subset personalization PUK required
44	service provider personalization PIN required

45	service provider personalization PUK required
46	corporate personalization PIN required
47	corporate personalization PUK required
General purpose error	
100	unknown
GPRS related errors to a failure to perform an attach	
103	illegal MS (#3)*
106	illegal ME (#6)*
107	GPRS service not allowed (#7)*
111	PLMN not allowed (#11)*
112	location area not allowed (#12)*
113	roaming not allowed in this location area (#13)*
GPRS related errors to a failure to activate a context and others	
132	service option not supported (#32)*
133	requested service option not subscribed (#33)*
134	service option temporarily out of order (#34)*
148	unspecified GPRS error
149	PDP authentication failure
150	invalid mobile class
Easy GPRS® related errors	
550	generic undocumented error
551	wrong state
552	wrong mode
553	context already activated
554	stack already active
555	activation failed
556	context not opened
557	cannot setup socket
558	cannot resolve DN
559	time-out in opening socket
560	cannot open socket
561	remote disconnected or time-out
562	connection failed
563	tx error
564	already listening

FTP related errors	
600	generic undocumented error
601	wrong state
602	cannot activate
603	cannot resolve name
604	cannot allocate control socket
605	cannot connect control socket
606	bad or no response from server
607	not connected
608	already connected
609	context down
610	no photo available
611	cannot send photo
612	resource used by other instance
Network survey errors	
657	network survey error (No Carrier)*
658	network survey error (Busy)*
659	network survey error (Wrong request)*
660	network survey error (Aborted)*
Misc errors	
9000	time out on reading data from the modem
9001	answer from modem von not OK
9002	FTP error no “CONNECT”
9003	FTP error no “NO CONNECT”
9004	Time out on sending data to the modem (XON/XOFF)

Tab. 10.18: Monitoring GPRS – list of error numbers

10.4 Installing new software

How to proceed::

1. switch off the instrument
2. connect the instrument to the PC using the serial interface cable
3. start the program *CVMegaload*
4. select active COM-Port
5. set baud rate to 19200
6. select the new program file which is to be downloaded to the instrument
7. switch on the instrument – download starts automatically
8. terminate the program *CVMegaload* after download.

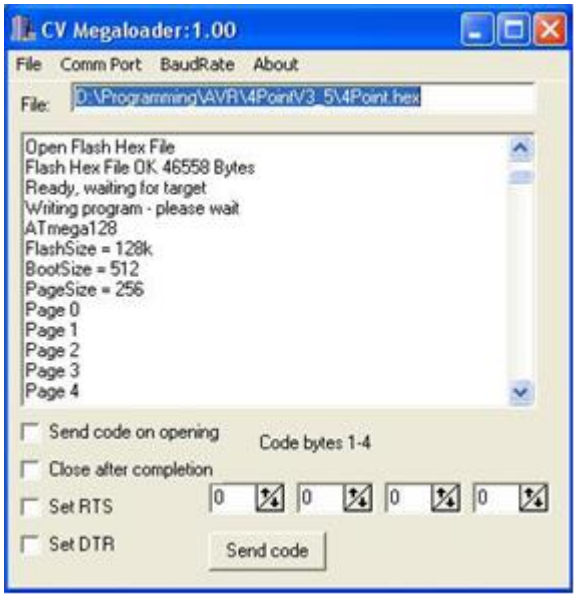

Fig. 10.1: Download is carried out

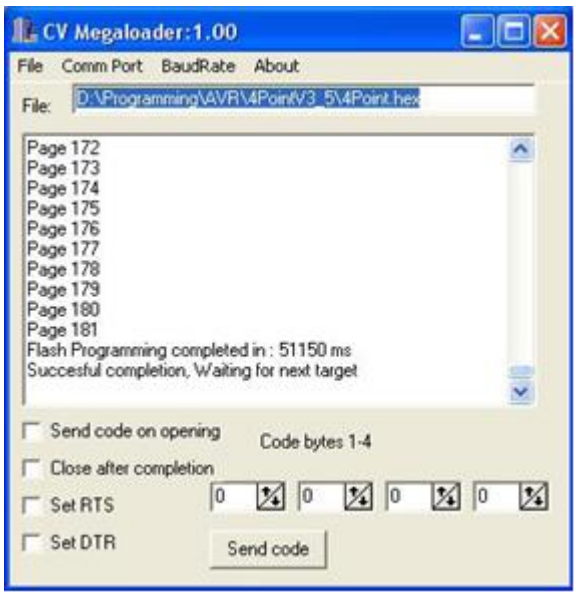

Fig. 10.2:Download is finished

10.5 Working with HTerm

HTerm is a terminal program for the serial interface RS232. With a program like HTerm the measurement date, the settings or a dump can be transferred to a PC.

HTerm can be downloaded for free from ➔ http://www.der-hammer.info/terminal

1. Start the program *HTerm* on your PC:

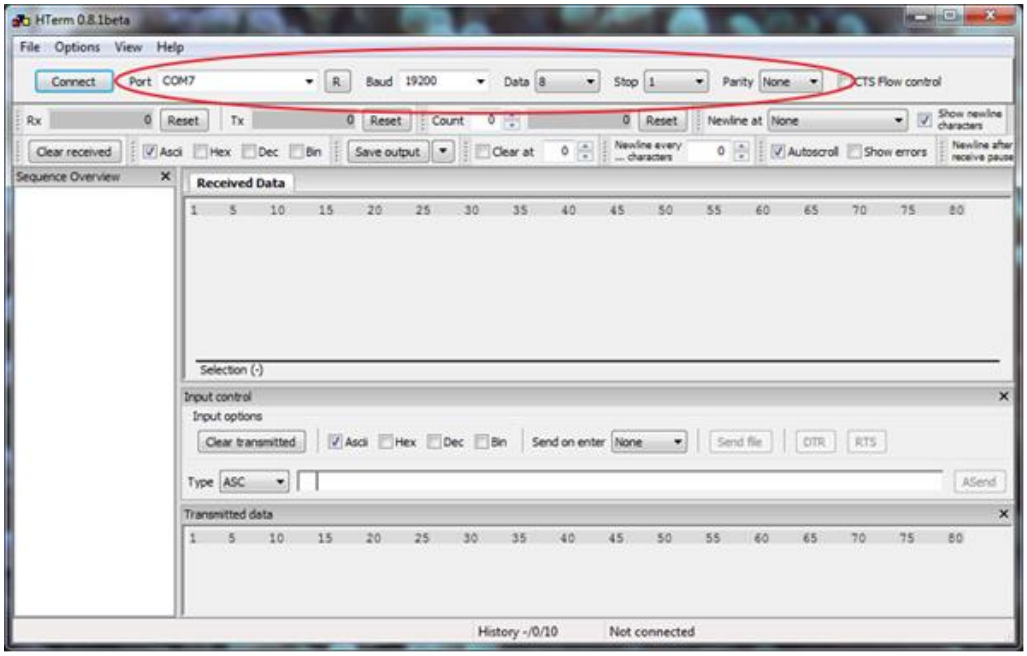

Fig. 10.3: *HTerm* – adjust settings

Parameters	Input
Port	select the correct COM Port from the pull down menu
Baud	select the baud rate from the pull down menu ⓘ
Data	number of data bits: “8”
Stop	number of stop bits: “1”
Parity	select “None”

Tab. 10.19: *HTerm* – parameters

ⓘ The **baud rates of the** *4point light 10W* and the baud rate here **must be identical**.

➔ 8.10.2 Communication, page 96

2. Adjust the parameters COM “port”, “baud rate”, “data bits”, “stop bits” and “parity”!
3. *Connect HTerm* and the serial interface by clicking on the button [Connect]

Example A dump has to be transferred. The following steps have to be carried out:

1. Adjust parameters in the terminal program
2. Switch to the *4point light 10W*
3. Start data transfer under “Settings”, “Save”, “Dump”

   The process may take up to 10 minutes. The instrument displays the status of the transfer.

4. After download switch to the terminal program

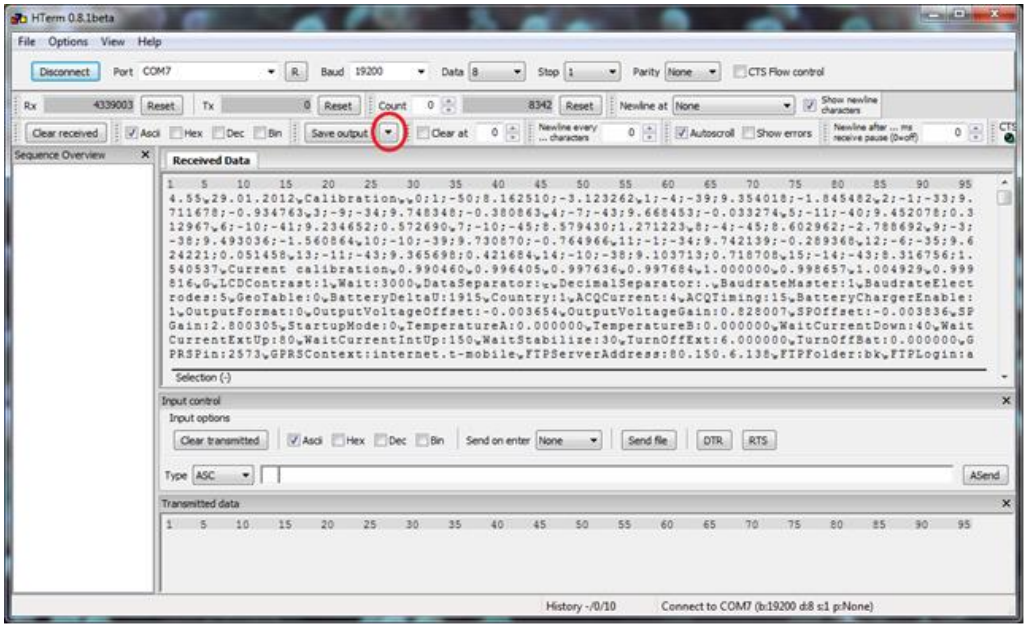

Fig. 10.4: Download is finished

5. Click on the red marked arrow (➔Fig. 10.4) and select the storage format. ⓘ

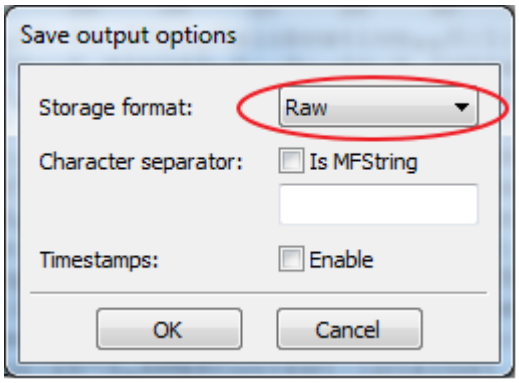

Fig. 10.5: Save download

6. Confirm selection with [OK]
7. Save data with [Save output]

ⓘ In case of transferring a dump select the storage format “Raw” from the pull down menu.

11 Technical data

Housing	
Size	25 x 12 x 5 cm
Weight	742 g
Display	4 x 20 characters
Interfaces	Serial interface RS232, isolated with full remote control for all functions

Transmitter	
Output frequency	0.26 Hz … 30 Hz
Output voltage	max. 380 V p-p
Constant output current	100 nA … 50 mA (8 steps)
Stability	> 0,5 %
Short circuit proof	exists

Receiver	
Input impedance	20 MΩ
Max. input voltage	±500 mV
Max. noise voltage + DC	±0,6 V
Resolution	100 nV
Accuracy	> 0,5 %
Max. overvoltage	200 V
Measurement speed	1,5 sec / measured value
AD-converter	24 Bit
Amplifier	Lock-in-amplifier with in-phase/out-of-phase detection
Transmitter cable	Crosstalk reduction
Very high suppression	at 16,66 Hz, 50 Hz, 60 Hz

Power supply	
External power supply	9 – 15 V, 1 A
Internal power supply	4 internal, rechargeable high capacity NiMH AA batteries (2,8 Ah, 1,2 V)

Working environment	
Range of temperature	0 °C … 50 °C (32 °F …122 °F)
Humidity	< 85 %

Storage temperature	
Storage of the instrument	-20 °C … +70 °C (-4 °F …+158 °F)

12 Index

Q

R

S

T

V

W